Self-operated Temperature Regulators

Type 1 and Type 1u
Type 4 and Type 4u
Temperature Regulators

Translation of original instructions

Type 1 in version with flanges or screwed ends

Type 4

Type 4u

Type 1 and Type 4 Temperature Regulators

Mounting and Operating Instructions

EB 2111/2112/2113/2121/2123 EN

Edition June 2016

Note on these mounting and operating instructions

These mounting and operating instructions assist you in mounting and operating the device safely. The instructions are binding for handling SAMSON devices.

➔ For the safe and proper use of these instructions, read them carefully and keep them for later reference.

➔ If you have any questions about these instructions, contact SAMSON's After-sales Service Department (aftersalesservice@samson.de).

The mounting and operating instructions for the devices are included in the scope of delivery. The latest documentation is available on our website (www.samson.de) > Product documentation. You can enter the document number or type number in the [Find:] field to look for a document.

Testing according to DIN EN

The Types 2231 to 2235 Control Thermostats have been tested together with valves by the German Technical Inspectorate (TÜV) in accordance with DIN EN 14597. The register number is available on request.

Definition of signal words

DANGER!
Hazardous situations which, if not avoided, will result in death or serious injury

WARNING!
Hazardous situations which, if not avoided, could result in death or serious injury

NOTICE
Property damage message or malfunction

Note:
Additional information

Tip:
Recommended action

1 General safety instructions 4

2 Process medium and scope of application 5

2.1 Transportation and storage 5

3 Design and principle of operation 5

4 Installation 8

4.1 Installing the valve 8

4.1.1 Strainer 9

4.1.2 Additional components 9

4.2 Installing the thermostat 10

4.2.1 Types 2231 and 2232 (bulb sensors) 10

4.2.2 Types 2233, 2234 and 2235 (air sensors) 11

4.2.3 Capillary tube 12

4.3 Dynamic behavior of the thermostats 12

4.3.1 Operating element 12

4.4 Excess temperature indication 13

5 Operation 14

5.1 Start-up 14

5.2 Set point adjustment 14

5.2.1 Correcting the set point dial 14

6 Mounting accessories 15

6.1 Extension piece 15

6.2 Separating piece 15

6.3 Double adapter 16

6.4 Reversing device in Type 4u 16

7 Maintenance – Replacing parts 17

7.1 Troubleshooting 17

8 Nameplate 20

9 Customer service 20

10 Dimensions and weights 21

10.1 Accessories · Dimensions and weight 23

1 General safety instructions

- The regulators are to be mounted, started up or serviced by fully trained and qualified personnel only; the accepted industry codes and practices are to be observed. Make sure employees or third persons are not exposed to any danger.
- All safety instructions and warnings given in these mounting and operating instructions, particularly those concerning installation, start-up and maintenance, must be strictly observed.
- According to these mounting and operating instructions, trained personnel refers to individuals who are able to judge the work they are assigned to and recognize possible dangers due to their specialized training, their knowledge and experience as well as their knowledge of the applicable standards.
- The regulators comply with the requirements of the European Pressure Equipment Directive 97/23/EC. Regulators with a CE marking have a declaration of conformity which includes information about the applied conformity assessment procedure. The declaration of conformity is available on request.
- To ensure appropriate use, only use the temperature regulators in applications where the operating pressure and temperatures do not exceed the specifications used for sizing the regulator at the ordering stage.
- The manufacturer does not assume any responsibility for damage caused by external forces or any other external factors.
- Any hazards that could be caused in the temperature regulator by the process medium, operating pressure or by moving parts are to be prevented by taking appropriate precautions.
- Proper transport, storage, installation, operation and maintenance are assumed.

Note: Non-electric control valve versions do not have their own potential ignition source according to the ignition risk assessment stipulated in EN 13463-1: 2009, section 5.2, even in the rare incident of an operating fault. Therefore, they do not fall within the scope of Directive 2014/34/EU.
For connection to the equipotential bonding system, observe the requirements specified in section 6.4 of EN 60079-14 (VDE 0165 Part 1).

2 Process medium and scope of application

Temperature regulators suitable for liquids, gases and vapors, especially for the heat transfer media, such as water, oil, and steam, or for coolants, such as cooling brine or cooling water. With Type 2231 to Type 2235 Control Thermostats for set points from –10 to +250 °C. Valves in nominal sizes DN 15 to 150. Nominal pressure PN 16 to 40. Suitable for temperatures up to 350 °C.

2.1 Transportation and storage

The temperature regulators must be carefully handled, transported and stored. Protect the regulators against adverse influences, such as dirt, moisture or frost before they are installed.

3 Design and principle of operation

See Fig. 2 on page 7.

Type 1/Type 4: The valve **closes** as the medium temperature rises and when the temperature rises above the adjusted set point.
Type 1u/Type 4u: The valve **opens** as the medium temperature rises and when the temperature rises above the adjusted set point.
The temperature regulators consist of the valve (1), thermostat (temperature sensor) (19) and capillary tube (11).
The valve mainly consists of the body with seat (2), plug (3) and plug stem (5). Depending on the application, different thermostats can be attached to the valve.
The thermostat comprises the temperature sensor (19), set point adjuster (12), capillary tube (11) and operating element (8).
The temperature regulators operate according to the liquid expansion principle. When, for example, the temperature at the temperature sensor (19) increases, the liquid contained in the sensor expands, causing the pin (9) of the operating element to be pushed upward by the bellows (10). During this process, the pin pushes the plug stem (5) together with the plug (3) towards the valve seat as the temperature at the sensor continues to rise until the valve is fully closed.
The Type 1 Temperature Regulator is equipped with an unbalanced valve. In contrast, Type 4 has a valve balanced by a metal bellows (4.1).
In this case, the upstream pressure is transferred through the hole in the plug stem to the outer surface of the bellows and the downstream pressure to the inside of the bellows.
As a result, the forces acting on the plug are canceled out and the valve is fully balanced. Consequently, any pressure changes in the process medium do not affect the position of the valve plug.

Table 1: *Type 1 and Type 4*

Temperature regulators	Valve	Thermostat
Type 1	Type 2111	Type 2231 to Type 2235
Type 1u	Type 2121	
Type 4	Type 2114	
Type 4u	Type 2114 with reversing device	

The reverse-acting Type 1u and Type 4u Temperature Regulators are used in plants intended to be cooled. Their principle of operation is reverse to that of the standard version, i.e. the valve opens when the temperature at the sensor rises. To achieve this, the valve plug is located above the valve seat in Type 1u and a reversing device is installed between the valve and the operating element in Type 4u.
The set point can be adjusted using a key (12). By turning the key, a spindle moves the piston (18) up or down, causing the volume of the liquid contained in the sensor (19) to change. As a result, the valve plug travels according to the adjusted set point within a higher or lower temperature range measured by the sensor.

Legend for Fig. 2

Valve		Control thermostat	
1	Valve body	7	Coupling nut
2	Seat	8	Operating element
3	Plug	9	Pin of operating element
4	Bottom section	10	Operating bellows
4.1	Balancing bellows	11	Capillary tube
		12	Set point adjustment key
5	Plug stem	13	Set point dial
5.1	Spring	14	Spindle
6	Threaded connection for operating element	15	Excess temperature protection
		16	Coupling nut
		17	Double nipple
		18	Piston
		19	Thermostat with bulb sensor

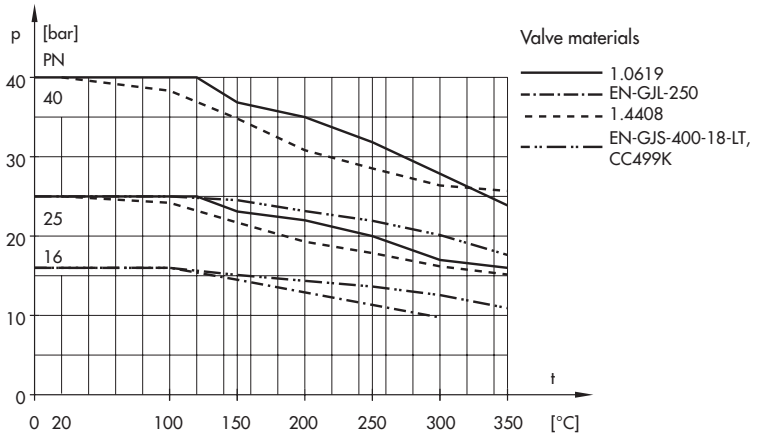

Fig. 1: *Pressure-temperature diagram (DIN EN)*

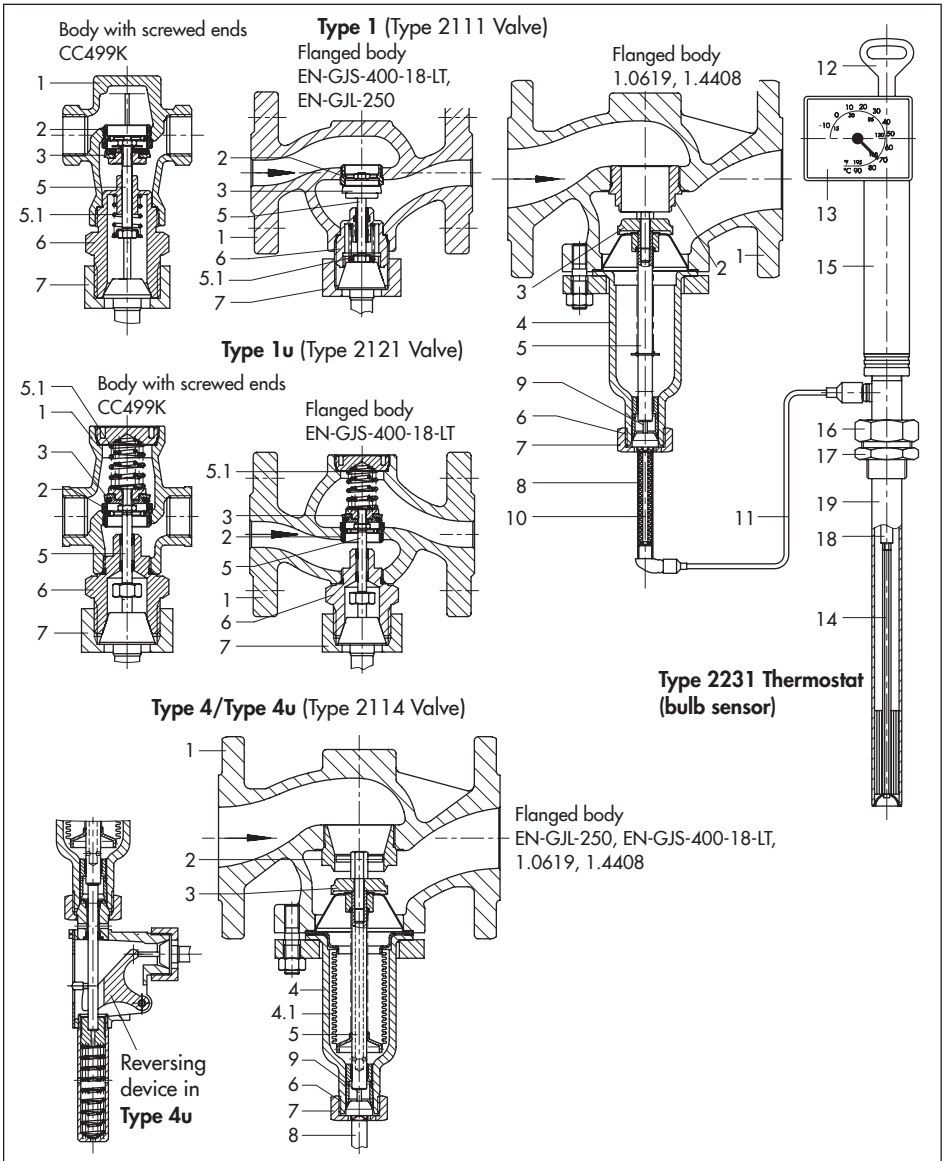

Fig. 2: *Functional diagrams*

4 Installation

Generally, installation instructions provided by the manufacturer of the unit or plant must be observed.

If necessary, contact the manufacturer or supplier of the unit.

The following points must be observed during installation:

The temperature regulator is first sealed when the operating element is fastened onto the bottom section.

WARNING!
Risk of injury due to process medium escaping possibly under high pressure.
Screw the operating element of the thermostat tightly to the valve to seal the body connection. Afterwards, open the shut-off valves.

4.1 Installing the valve

Choose a place of installation that allows you to freely access the regulator even after the entire plant has been completed.

Note:
*Do **not** install the temperature regulator between a pressure reducing valve and its control line connection.*

Flush the pipeline thoroughly before installing the temperature regulator. Install a strainer (see section 4.1.1) upstream of the regulator to prevent any sealing parts, weld spatter and other impurities carried along by the process medium impairing the proper functioning of the valve, above all the tight shut-off.

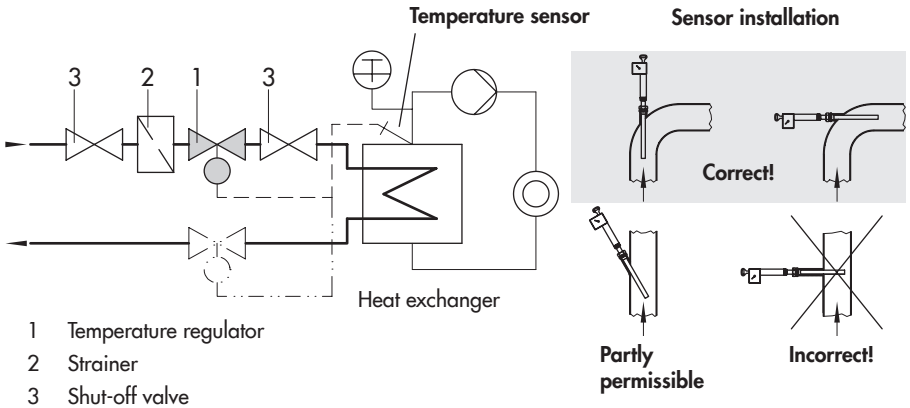

1 Temperature regulator
2 Strainer
3 Shut-off valve

Fig. 3: *Typical installation of Type 1 or Type 4 (plant schematics) · Mounting position of the temperature sensor*

Note:
Install the valve in a horizontal pipeline with the operating element connection suspended downward.
The valve of Type 1u and Type 4u (only up to DN 80) can also be installed with the operating element pointing upward.

- The direction of flow must correspond to the arrow on the body.
- Make sure the valve body is installed free of stress. If necessary, support the pipelines near the connections.
- When regulating steam, install upstream steam pipes with a slight upward slope and downstream steam pipes with a slight downward slope to prevent excessive amounts of condensed water from collecting.

NOTICE!
Malfunction and damage due to adverse effects of weather (temperature, humidity).
Do not install the temperature regulator outdoors or in rooms prone to frost. If such a location cannot be avoided, protect the regulator against freezing up if the process medium flowing through the valve can freeze up. Either heat the regulator or remove it from the plant and completely drain the residual medium.

4.1.1 Strainer

Install the strainer upstream of the temperature regulator.

- The flow of direction must correspond with the direction indicated by the arrow on the body.
- The filter element must be installed to hang downwards or sideways for applications with steam.

Tip:
Remember to leave enough space to remove the filter element for cleaning.

4.1.2 Additional components

We recommend installing a hand-operated shut-off valve upstream of the strainer and downstream of the temperature regulator to be able to shut down the plant for cleaning and maintenance, and when the plant is not used for longer periods of time (see Fig. 3).

To check the adjusted set point, we recommend installing a thermometer near the sensor.

4.2 Installing the thermostat

See Fig. 2.

4.2.1 Types 2231 and 2232 (bulb sensors)

Bulb sensors are used to measure the temperature of liquids. They are designed for installation in pipelines, heat exchangers, boilers, baths, tanks, etc.

Note:
The entire length of the sensor must be immersed in the process medium. Observe the permissible mounting position as illustrated in Fig. 3 (sensor installation).

Installation recommendations

Select the place of installation ensuring that the sensor is installed as close as possible to the heat source, but avoid exposing it to overheating.

When mounted in a boiler, install the sensor in the top third of the boiler.

When mounted in a counterflow heat exchanger, install the sensor in a pipe elbow, directly behind the pipe end socket piece.

In plants with only temporary heat consumption, install the temperature sensor so that it is totally immersed in the heat exchanger. If this is not possible, a circulating pipe must be provided to allow the sensor to always respond to temperature changes even when no medium is discharged from the heat exchanger.

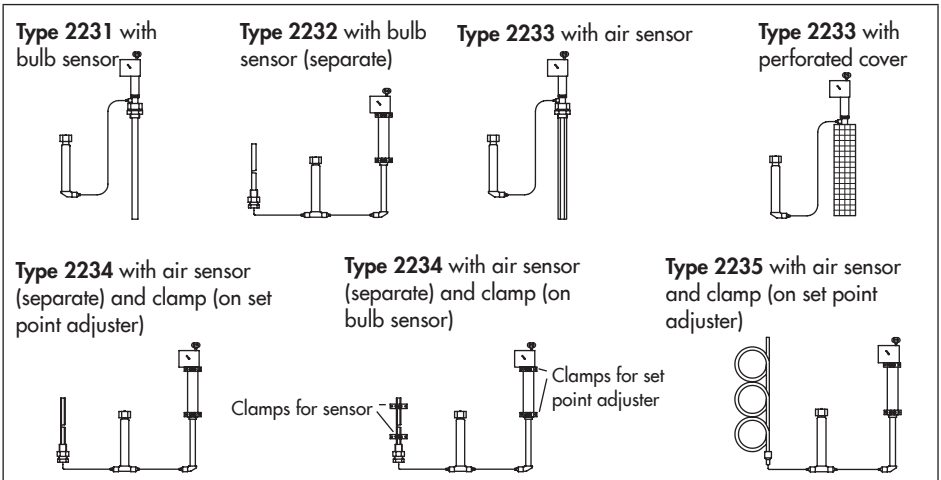

To mount the set point adjuster or sensor to a wall, various clamps are available as accessories.
To mount the air sensor to a wall, a perforated cover (integrated into the clamps) is generally required.

Fig. 4: *Thermostat versions*

1. Weld on a pipe socket with female thread (socket-weld design) of approx. 40 mm in length at the place of installation (this also applies when a thermowell is used).
2. Remove the double nipple (17) or thermowell (if used) from the sensor (19) and seal it into the welded socket.
3. Adjust the highest possible set point on the set point dial (13) using the key (12).
4. Insert the sensor with the associated seal into the double nipple or thermowell. Secure it with the coupling nut (16). The entire length of the temperature sensor (19) or thermowell must be immersed in the process medium.

! ***NOTICE!***
Galvanic corrosion due to incorrectly selected materials of the mounting parts.
On installing the sensor or thermowell, only combine the same kind of materials (e.g. stainless steel with stainless steel or copper together with other copper materials).

Thermowell

When a thermowell is used, we recommend filling the free space between sensor and thermowell with oil or, when installed horizontally, with grease or any other heat transfer medium to avoid delays during heat transmission. Observe the thermal expansion of the filling medium.

Allow some space for expansion or slightly loosen sensor nut for pressure compensation.

4.2.2 Types 2233, 2234 and 2235 (air sensors)

Types 2233 and **2234** are designed for installation in air heaters, air ducts, drying cabinets, etc. Install the sensor from the outside into the room and secure it with a special clamp (accessories). The entire length of the sensor must be immersed in the air flow to be regulated.

For **Type 2234**, install the set point adjustment in an easily accessible location.

Avoid locations with considerable ambient temperature fluctuations.

Type 2233 with perforated cover is generally used for installation in manufacturing facilities, living spaces, baths, etc.

Installation recommendations

Mount the sensor protected by a perforated cover to a suitable location, if possible in the middle of the wall.

Type 2234 with clamps (or perforated cover) is suitable for installation in drying chambers, dryers, air heaters, incubators, etc.

In case of forced air circulation, install the sensor near the supply air inlet.

Mount the set point adjustment outside the room to be controlled in an easily accessible location and where no temperature fluctuations can occur.

Type 2235 is equipped with a temperature sensor to be calibrated on site. This allows the measurement of almost all temperature layers. Make sure the set point adjustment for this sensor is installed outside the room to

be controlled in an easily accessible location. Avoid locations with considerable ambient temperature fluctuations.

When regulating the temperature in greenhouses, make sure that the thermostat and set point adjuster are not exposed to direct sunlight.

When the temperature regulating system is shut down during the summer, adjust a high set point to protect the thermostat.

4.2.3 Capillary tube

Carefully run the capillary tube (11) without bending or twisting it. Avoid locations with considerable ambient temperature fluctuations along the entire length of the tube.

Note:
Do not damage or shorten the capillary tube. Roll up excess tube to form a ring. The smallest permissible bending radius is 50 mm.

4.3 Dynamic behavior of the thermostats

The dynamics of the regulator are mainly determined by the response of the sensor with its characteristic time constant. The response times of SAMSON sensors operating according to different principles measured in water are listed below.

Table 2: *Time constants of SAMSON thermostats*

Functional principle	Type ... **Thermostat**	**Time constant [s]** Without Thermowell	**Time constant [s]** With Thermowell
Liquid expansion	2231	70	120
	2232	65	110
	2233	25	–[1)]
	2234	15	–[1)]
	2235	10	–[1)]
	2213	70	120
Adsorption	2212	–[1)]	40

[1)] Not permissible

4.3.1 Operating element

Attach the operating element (8) to the valve body using the coupling nut (7). If necessary, use the key (12) to adjust the highest possible set point, causing the pin of the operating element (9) to retract.

4.4 Excess temperature indication

If the temperature at the sensor exceeds 100 K, the inside piston (15) together with the stem is pushed out of the housing of the set point dial (13).

If the stem does not move back after the temperature had dropped again, the operating element (8) has been damaged due to excessively high temperature. Send the thermostat back to SAMSON for repair.

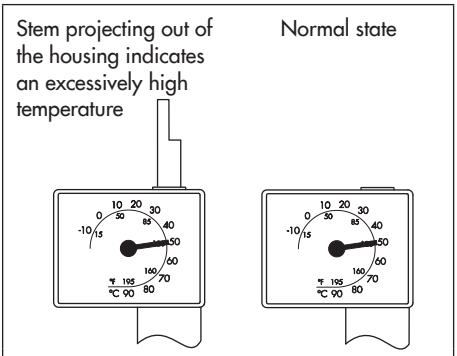

Fig. 5: *Excess temperature indication*

Size specifications for SAMSON thermostats

Table 3: *Size, thermostat and valve*

Size	**Thermostat** to fit:	**Types 2111/2121/2114/2118/2119 Valve**
50	Type 2212 for STL	DN 15 to 50
150	Types 2231, 2232, 2233, 2234, 2235	DN 15 to 150
	Type 2213 for STM	
	Type 2212 for STL	DN 65 to 150

5 Operation

See Fig. 2.

5.1 Start-up

The temperature regulator is first sealed when the operating element is screwed onto the bottom section.

WARNING!
Risk of injury due to process medium escaping possibly under high pressure.
Screw the operating element of the thermostat tightly to the valve to seal the body connection. Afterwards, open the shut-off valves.

Fill the plant slowly with the process medium.

5.2 Set point adjustment

Only use the key (12) to adjust the required temperature set point at the set point dial (13).

1. Slowly open the hand-operated shut-off valve downstream of the valve and then the shut-off valve upstream of the valve.
2. Check the adjusted set point temperature at the thermometer installed near the temperature sensor.
3. Slowly turn the key clockwise (↻) to increase the temperature and counterclockwise (↺) to reduce it.

Tip:
Higher set point temperatures can be adjusted in increments as required. However, to lower the set point temperature, proceed in steps of 10 to 20 °C. When doing so, wait for the process medium to cool down before continuing. Watch the thermometer.

5.2.1 Correcting the set point dial

There are many ways to combine the temperature regulators with thermostats that have varying proportional control action. As a result, the temperature adjusted on the dial often deviates from the actual temperature (measured by a reference thermometer).

The temperature can be corrected by turning the dial housing:

4. Undo the screw labeled "Korrektur" on the back of the dial housing.
5. Turn the entire dial housing until the dial shows the same temperature as the reference thermometer.

Viewed from the front with the dial housing on top. A 360° turn corresponds to a set point change of approx. 1.5 °C.

– Turn clockwise ↻:
  To increase the set point.
– Turn counterclockwise ↺:
  To reduce the set point.

6 Mounting accessories

See Fig. 6.

6.1 Extension piece

An extension piece is installed between valve and thermostat to protect the operating element against high temperatures.

Type 1: DN 15 to 50 for 220 °C and higher; with **Type 2212 STL/Type 2213 STM:** with valve made of red brass, spheroidal graphite iron and cast iron for 150 °C and higher.

Type 4: DN 15 to 100 for 220 °C and higher, DN 125 to 250 for 220 °C and higher already mounted to the valve, up to max. 350 °C.

A thermostat can be changed on site to retrofit an extension piece, separating piece or double adapter.

Remember that process medium can escape while unscrewing the operating element. Therefore, take necessary precautions to prevent this.

WARNING!
Risk of injury due to process medium escaping possibly under high pressure.
Depressurize the relevant section of the pipeline and, if necessary, drain it as well. When used at high temperatures, allow the plant section to cool down to ambient temperature.

How to proceed:

1. Adjust the highest possible temperature set point, causing the pin of operating element to detach itself from the plug stem of the valve.
2. Unscrew the operating element.
3. Screw extension piece onto the valve body. Remount the operating element.
4. Adjust the set point as described in section 5.1.

6.2 Separating piece

A separating piece is installed between the operating element and valve to protect the operating element from pressures above 16 bar. In stainless steel versions, it separates the non-ferrous metals of the operating element from the medium in the valve as well as preventing the medium from escaping on removing the thermostat.

Version **1**: The spindle (2) is fitted with O-rings which seals the operating element against the process medium.

Version **2**: A metal bellows is used as a sealing element.

For mounting, proceed as described in section 6.1.

6.3 Double adapter

The double adapter allows a further thermostat to be connected to achieve additional temperature regulation. See instructions in section 6.1 for retrofitting.

6.4 Reversing device in Type 4u

Note:
The reversing device can only be attached to the valve when the stem (3) is fully retracted.

The spring (8) of the reversing device is pretensioned upon delivery over the lever (4) using a wooden bolt (5) with washer (6) and coupling nut (7).

How to proceed:

1. Screw the pretensioned reversing device to the bottom section of the valve.
2. As the device is pretensioned, carefully unscrew the coupling nut (7) and remove it from the reversing device together with the wooden bolt and washer. Keep the parts for later use, for example, to pretension the reversing device again if it needs to be reinstall after disassembly.
3. Adjust the highest possible set point to cause the pin of the operating element to retract. Mount the operating element.

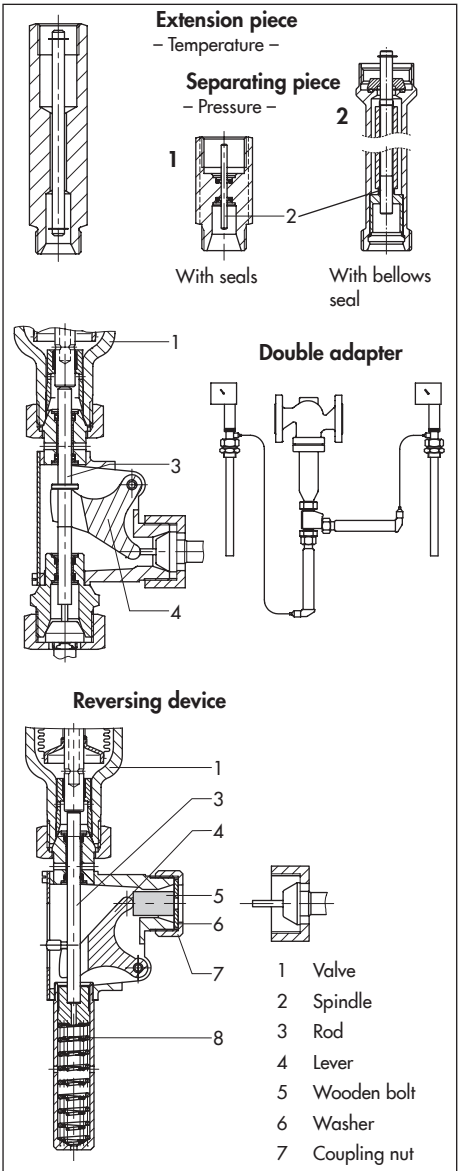

Fig. 6: *Accessories*

7 Maintenance – Replacing parts

See Fig. 2.

The temperature regulators do not require any maintenance. Nevertheless, they are subject to natural wear, particularly at the seat and plug.

Depending on the operating conditions, check the regulator at regular intervals to avoid possible malfunctions.

If the temperature exceeds the value adjusted at the temperature sensor, possible causes for this may include:

- The thermostat is defective due to excessive temperatures.
- Valve seat and plug are contaminated with dirt.
- Seat and plug leak due to natural wear.

On replacing the thermostat, remember that process medium can escape while unscrewing the operating element. Therefore, take necessary precautions to prevent this.

WARNING!
Risk of injury due to process medium escaping possibly under high pressure.
Depressurize the relevant section of the pipeline and, if necessary, drain it as well. When used at high temperatures, allow the plant section to cool down to ambient temperature.

How to proceed:

Exchanging the thermostat and checking the seat and plug

1. If the thermostat still works, adjust the highest possible temperature set point, causing the pin (9) of operating element to detach itself from the plug stem of the valve.
2. Unscrew the coupling nut (7) and remove the operating element (8). Process medium still in the valve may escape!

– Mount new thermostat and fasten it tightly to the bottom section (4) using the coupling nut (7).

Checking the seat and plug

3. Unscrew the valve flange together with the bottom section (4) from the valve body and pull them out downward.
4. Clean the seat (2) and plug (4) and, if necessary, renew them.

7.1 Troubleshooting

The listed examples of malfunctions are caused by mechanical faults in the valve or thermostat as well as incorrect regulator sizing.

In the simplest case, the functioning can be restored following the recommended action. To repair the regulator, read the corresponding mounting and operating instructions.

As in many cases, special tools are required, we advise you to contact SAMSON after-sales service to find out how to proceed to repair the regulator or replace a component (see section 9).

Exceptional operating and installation conditions can lead to changed situations that may affect the control response and lead to malfunctions. In such cases, check the installation conditions, process medium, temperature and pressure conditions. A thorough analysis may often require the on-site assistance of SAMSON after-sales service.

The table is not intended to be exhaustive as there are diverse reasons for malfunctions.

Table 4: *Troubleshooting*

Possible reasons	Recommended action
Temperature regulators for heating applications	
Temperature at the sensor exceeds the set point	
Leak at seat and plug	Remove valve from the pipeline and clean seat and plug. Renew plug, if necessary. If this is not possible, return regulator to SAMSON for repair.
Valve too large for control task	Recalculate K_{VS} coefficient. Contact SAMSON.
Sensor installed in the wrong location.	The entire length of the temperature sensor must be immersed in the process medium and where idle times cannot occur. Change mounting position accordingly.
Temperature at the sensor does not reach the set point	
Nominal size (DN) of the valve is too small for the control task.	Recalculate K_{VS} coefficient. Contact SAMSON.
A safety device (e.g. STL, STM etc.) has been triggered.	Check plant. Rectify the problem and unlock STL.
Insufficient heating energy available	Draw up an energy balance.
Strainer blocked	Drain and clean filter of the strainer.
Incorrectly installed valve (direction of flow).	Observe the direction of flow (arrow on the body) on installing the regulator.
Control loop hunts	
Nominal size (DN) of the valve is too large for the control task.	Recalculate K_{VS} coefficient. Contact SAMSON.
Time constant is too large for the control loop.	Fill the thermowell with thermal paste, remove thermowell or use sensor with smaller time constant.

Possible reasons	Recommended action
Temperature regulators for cooling applications	
Temperature at the sensor does not reach the set point	
Sensor defective	Replace thermostat[1].
Leak at seat and plug	Remove valve from the pipeline and clean seat and plug. Renew plug, if necessary. If this is not possible, return regulator to SAMSON for repair.
Valve too large for control task	Recalculate K_{VS} coefficient. Contact SAMSON.
Sensor installed in the wrong location.	The entire length of the temperature sensor must be immersed in the process medium and where idle times or heat buildup cannot occur. Change mounting position accordingly.
A safety temperature limiter (STL) has been triggered.	Check plant. Rectify the problem and unlock STL.
Temperature at the sensor exceeds the set point	
Nominal size (DN) of the valve is too small for the control task.	Recalculate K_{VS} coefficient. Contact SAMSON.
Thermostat defective	Send the thermostat back to SAMSON for repair.
Insufficient cooling energy available	Draw up an energy balance.
Strainer blocked	Drain and clean filter of the strainer.
Incorrectly installed valve (direction of flow).	Observe the direction of flow (arrow on the body) on installing the regulator.
Control loop hunts	
Nominal size (DN) of the valve is too large for the control task.	Recalculate K_{VS} coefficient. Contact SAMSON.
Time constant is too large for the control loop.	Fill the thermowell with thermal paste, remove thermowell or use sensor with smaller time constant.

1) To narrow down the possible reason and troubleshoot, proceed as follows:
The set point can be reduced (with key for set point adjustment) by approx. 20 °C without excessive force and the stem (Fig. 5) remains in the dial housing: **thermostat** is defective.
The set point can be reduced (with key for set point adjustment) by approx. 20 °C by applying more force and the stem (Fig. 5) continues to rise out of the dial housing: **valve** leaks.

Note:
Conversion from chromate coating to iridescent passivation
We at SAMSON are converting the surface treatment of passivated steel parts in our production. As a result, you may receive a device assembled from parts that have been subjected to different surface treatment methods. This means that the surfaces of some parts show different reflections. Parts can have an iridescent yellow or silver color. This has no effect on corrosion protection.
For further information go to ▶ www.samson.de/chrome-en.html

8 Nameplate

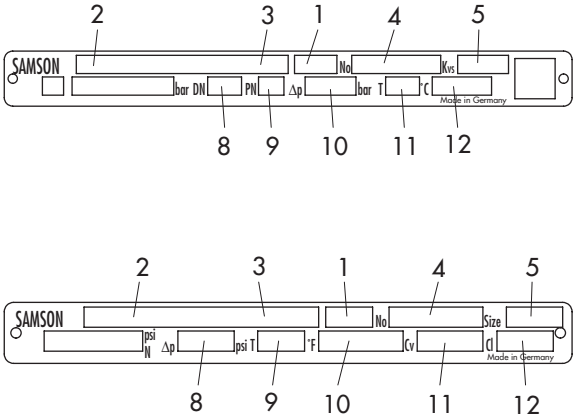

Flanged versions

1 Valve type
2 Model number
3 Model number index
4 Order number/date
5 K_{VS} coefficient
8 Nominal size
9 Nominal pressure
10 Perm. differential pressure Δp
11 Perm. temperature
12 Body material

ANSI version

5 Valve size
8 Perm.differential pressure Δp
9 Perm. temperature (°F)
10 Body material
11 C_V coefficient (K_{VS} x 1.17)
12 ANSI Class (pressure rating)

Fig. 7: *Nameplate for flanged valves*

9 Customer service

If malfunctions or defects occur, contact the SAMSON After-sales Service department for support. Please send your inquiries to: aftersalesservice@samson.de

The addresses of SAMSON AG, its subsidiaries, representatives and service facilities worldwide can be found on the SAMSON website (▶ www.samson.de), in all SAMSON product catalogs or on the back of these Mounting and Operating Instructions.

To assist diagnosis, specify the following details (see section Fig. 7):

- Type and nominal size of the valve, Type ... Thermostat
- Model number with index
- Upstream and downstream pressure
- Temperature and process medium
- Min. and max. flow rate
- Is a strainer installed?
- Installation drawing showing the exact location of the regulator and all the additionally installed components (shut-off valves, thermometer, etc.)

10 Dimensions and weights

Table 5: *Dimensions in mm and weights in kg*

Type 1										
Nominal size	DN	G ½	G ¾	G 1	15	20	25	32	40	50
Length L	mm	65	75	90	130	150	160	180	200	230
H [1] EN-GJS-400-18-LT, EN-GJL-250, CC499K	mm	–			372			442		
H1 [1] EN-GJS-400-18-LT, EN-GJL-250, CC499K	mm	–			82			152		
Weight, approx.	kg	0.9	1.0	1.1	4			10 [2]		
H [1] 1.0619, 1.4408	mm	–			515					
H1 [1] 1.0619, 1.4408	mm	–			225					
Weight, approx.	kg	–			4	4.5	5.5	10	11.5	13.5

[2] Change in length with extension piece: +55 mm and with separating piece: +140 mm/180 mm
[3] For PN 16; PN 25/40: +15 %

Type 1u										
Nominal size	DN	G ½	G ¾	G 1	15	20	25	31	40	50
Length L	mm	65	75	90	130	150	160	180	200	230
H	mm	350			249			329		
H1	mm	60			59			80		
H2	mm	46			46			92		
Weight, approx.	kg	1	1.3	1.5	4.5	5	6	11	11.5	14

Types 4 and 4u												
Nom. size	DN	15	20	25	32	40	50	65	80	100	125	150
Length L	mm	130	150	160	180	200	230	290	310	350	400	480
H (Type 4u)	mm	515						545		570	675	910
H [1]	mm	515						590		645	750	880
H1 [1]	mm	225						300		355	460	590
Weight [2], kg		5	5.5	6.5	13	13.5	16	27	32	40	70	113

[1] Change in length with extension piece: +55 mm and with separating piece: +140 mm/180 mm
[2] For PN 16; PN 25/40: +15 %

Thermostat Type	2231	2231/32 Size 250	2232	2233	2234	2235
Immersion depth T	290 mm	≈ 980 mm	235 mm	430 mm	460 mm	3460 mm
Weight, approx.	3.2 kg	6.5 kg	4 kg	3.4 kg	3.7 kg	3.6 kg

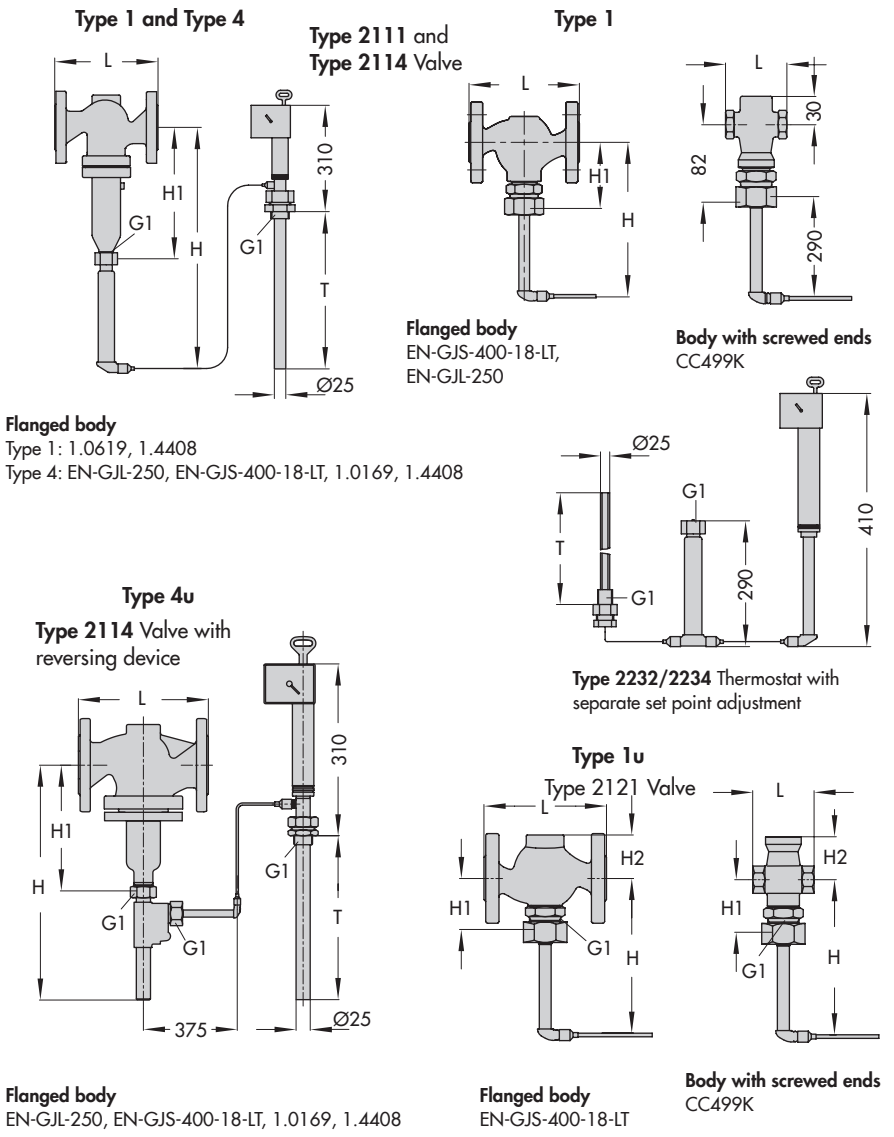

Fig. 8: *Dimension diagrams · All dimensions in mm*

10.1 Accessories · Dimensions and weight

Types 2232/2233/2234/2235 · Clamps and perforated cover for wall mounting

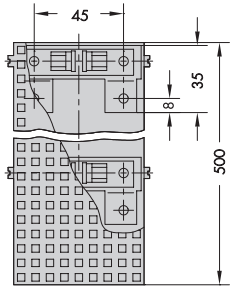

To mount the set point adjuster or sensor to a wall, suitable clamps (photo) are available.

The clamps for the sensor are integrated into the perforated cover.

Clamp with bracket	
For set point adjuster	Order no.: 8395-0039
For sensor	Order no.: 8395-0037

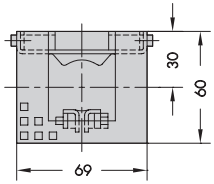

Extension piece/separating piece

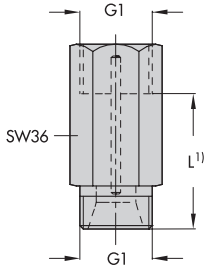

Extension piece

Standard version

L = approx. 140 mm, approx. 0.5 kg

With bellows seal (special version)

L = approx. 180 mm, approx. 0.6 kg

Separating piece with seals

L = approx. 55 mm, approx. 0.2 kg

1) Add the dimension L to H and H1 when these accessories are used.

Fig. 9: *Dimensions of accessories · Dimensions in mm*

Type 2231/2232 · Thermowells

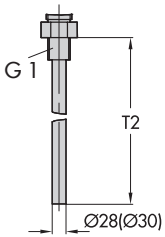

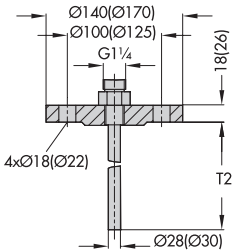

Thermostat	Type	2231	2232
Immersion depth T2	mm	325	250

Type 2231/2232 · Thermowells for flammable gases (PN 100)

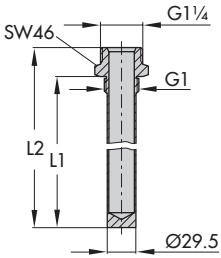

Thermostat	Type	2231	2232
Length L1	mm	315	255
Length L2	mm	340	280

Type 2233/Type 2234 · Flange

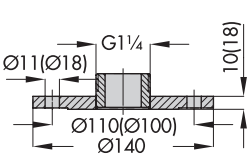

Flange PN 6; 140 mm outer diameter

Flange PN 40/DN 32 (dimensions in parentheses)

Fig. 10: *Dimensions of accessories · Dimensions in mm*

SAMSON AG · MESS- UND REGELTECHNIK
Weismüllerstraße 3 · 60314 Frankfurt am Main, Germany
Phone: +49 69 4009-0 · Fax: +49 69 4009-1507
samson@samson.de · www.samson.de **EB 2111/2112/2113/2121/2123 EN**

2016-06-09 · English