Self-operated Pressure Regulators

Differential Pressure Regulators
Type 45-1 and Type 45-2 · Installation in the high-pressure pipe
Type 45-3 and Type 45-4 · Installation in the low-pressure pipe

Type 45-1

Type 45-2

Mounting and Operating Instructions

EB 3124 EN

Edition April 2016

Definition of signal words

DANGER!
Hazardous situations which, if not avoided, will result in death or serious injury

WARNING!
Hazardous situations which, if not avoided, could result in death or serious injury

NOTICE
Property damage message or malfunction

Note:
Additional information

Tip:
Recommended action

1 General safety instructions 4
2 Process medium and scope of application 5
2.1 Transportation and storage 5
3 Design and principle of operation 5
4 Installation 8
4.1 Mounting position 8
4.2 Control line 8
4.3 Strainer (filter) 8
4.4 Shut-off valves 8
4.5 Pressure gauges 9
5 Operation 9
5.1 Start-up 9
5.2 Adjusting the set point 9
5.3 Decommissioning 10
6 Maintenance · Troubleshooting 10
6.1 Cleaning or replacing the plug 12
6.2 Replacing the operating diaphragm 12
7 Nameplate 14
8 After-sales service 15
9 Dimensions 16
10 Technical data 18

1 General safety instructions

- The device must be mounted, started up, or serviced by fully trained and qualified personnel only; the accepted industry codes and practices are to be observed. Make sure employees or third persons are not exposed to any danger.
- All safety instructions and warnings given in these mounting and operating instructions, particularly those concerning installation, start-up, and maintenance, must be strictly observed.
- According to these mounting and operating instructions, trained personnel refers to individuals who are able to judge the work they are assigned to and recognize possible dangers due to their specialized training, their knowledge and experience as well as their knowledge of the applicable standards.
- The devices comply with the requirements of the European Pressure Equipment Directive 97/23/EC. The declaration of conformity issued for a regulator bearing the CE marking includes information on the applied conformity assessment procedure. This declaration of conformity can be provided on request.
- To ensure appropriate use, only use the device in applications where the operating pressure and temperatures do not exceed the specifications used for sizing the device at the ordering stage.
- The manufacturer does not assume any responsibility for damage caused by external forces or any other external factors.
- Any hazards that could be caused in the regulator by the process medium, operating pressure or by moving parts are to be prevented by taking appropriate precautions.
- Proper transport, storage, installation, operation, and maintenance are assumed.

Note: Non-electric control valve versions whose bodies are not lined with an insulating material coating do not have their own potential ignition source according to the risk assessment stipulated in EN 13463-1: 2009, section 5.2, even in the rare incident of an operating fault. Therefore, such valve versions do not fall within the scope of Directive 2014/34/EU.

2 Process medium and scope of application

Differential pressure regulators for district heating systems, extended piping systems, and industrial applications

Differential pressure set points (Δp) from **0.1** to **10 bar** · Valves in **DN 15** to **50** · Nominal pressure **PN 16** and **25** · Suitable for liquids [1] up to **150 °C** as well as nitrogen and air up to **150 °C**

[1] The materials in the regulator are also resistant to high concentrations of glycol. Nevertheless, glycol reacts when it comes into contactwith metals and causes acids to form. We cannot prevent this reaction. Therefore, it must be prevented by using suitable inhibitors.

2.1 Transportation and storage

The devices must be carefully handled, transported, and stored. Protect the regulator against adverse influences, such as dirt, moisture or frost, during storage and transportation.

3 Design and principle of operation

See Fig. 3 on page 7.

The differential pressure regulators basically consist of the valve with balanced plug as well as a closing actuator with an operating diaphragm.

In Type 45-1 and Type 45-3, the set point spring (8) installed into the valve determines the set point. Whereas, in Type 45-2 and Type 45-4, the set point can be adjusted by the set point springs (8) in the actuator.

The differential pressure regulators are designed to maintain a constant differential pressure between the high-pressure and low-pressure lines to an adjustable set point.

The valve closes when the differential pressure rises.

Types 45-1 and 45-2 · Installation in the flow pipe

The medium flows through the valve in the direction indicated by the arrow. The pressure in the valve outlet (high pressure) is transferred to the high-pressure chamber of the actuator over the attached control line (11) and the low pressure from the return flow pipe is transferred to the low-pressure chamber of the actuator over a control line (12) to be installed on site.

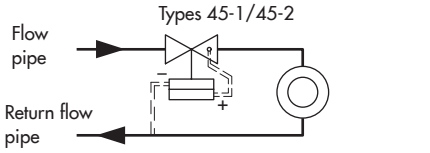

Fig. 1: *Installation in the flow pipe*

Types 45-3 and 45-4 · Installation in the return flow pipe

The pressure upstream of the valve (low pressure) is transferred to the low-pressure chamber of the actuator through the borehole (13) and the high pressure from the flow pipe is transferred to the high-pressure chamber of the actuator over a control line (11) to be installed on site.

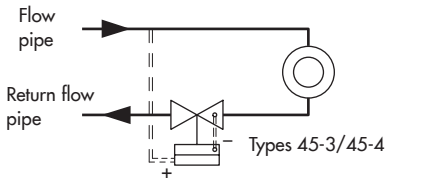

Fig. 2: *Installation in the return flow pipe*

The differential pressure creates a positioning force at the operating diaphragm which moves the valve plug depending on the force of the set point spring(s) (8/10).

Table 1: *Tightening torques* · See Fig. 3

Tightening torques		
Position	**DN**	**Nm**
Plug (3)	15 to 25 32 to 50	70 110
Screw (14)	15 to 32 40 and 50	8 18
Control line (11)	15 to 50 15 to 25 [1)]	22 10

[1)] For PN 16

Type 45-2 (45-4)

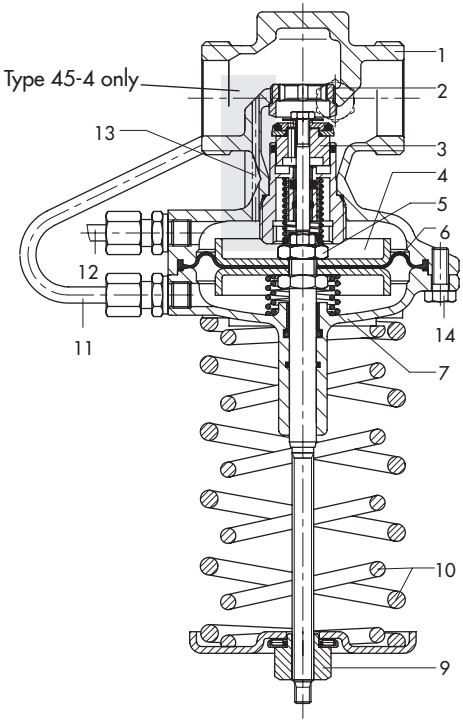

Type 45-4 (45-2) · DN 15 to 32
Set point range 0.1 to 0.5 bar and 0.1 to 1 bar

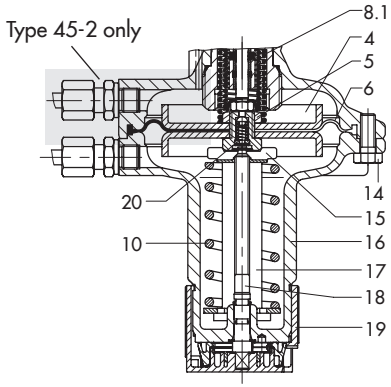

Type 45-1 (45-3)

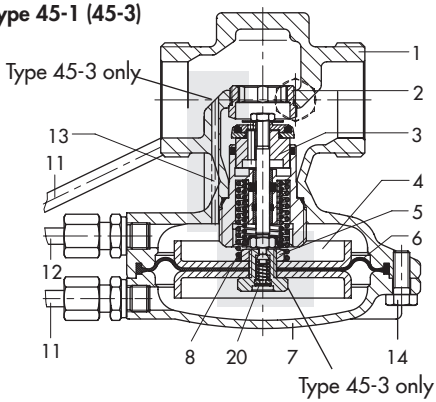

1 Valve body
2 Seat
3 Plug
4 Diaphragm plate
5 Nut
6 Operating diaphragm
7 Diaphragm case
8 Set point spring (ready adjusted set point)
8.1 Valve spring
9 Set point adjuster
10 Set point springs (for set point adjustment)
11 Control line attached (Types 45-1 and 45-2)
External control line (Types 45-3 and 45-4)
12 External control line (Types 45-1 and 45-2)
13 Borehole in the body (Types 45-3 and 45-4)
14 Screws
15 Spring plate
16 Bottom section of the body
17 Support
18 Spindle
19 Set point adjuster (manual adjuster)
20 Internal excess pressure limiter (overload protection, Types 45-3 and 45-4 only)

Fig. 3: *Functional diagrams*

4 Installation

See Fig. 3 on page 7.

4.1 Mounting position

Install the differential pressure regulator in horizontal pipelines with the actuator suspended downward (regulators in DN 15 to 25 can also be installed in vertical pipelines).

For medium temperatures above 80 °C, installation with the diaphragm actuator on top is **not** permitted.

➔ Make sure the regulator is installed free of stress.

➔ The flow of direction must correspond with the direction indicated by the arrow on the valve body.

➔ Install a strainer (e.g. SAMSON Type 1 NI) upstream of the regulator to prevent any sealing parts, weld spatter, and other impurities carried along by the process medium impairing the proper functioning of the valve, above all the tight shut-off.

! ***NOTICE***
Possible malfunction and damage due to adverse effects of weather conditions (temperature, humidity). Do not install the regulator outdoors or in rooms prone to frost. If such a location cannot be avoided, protect the regulator against freezing up if the process medium flowing through the valve can freeze up. Either heat the regulator or remove it from the plant and completely drain the residual medium.

4.2 Control line

A control line with 6 mm pipe diameter must be adapted and mounted on site. Make sure that the control line is free of dirt.

Refer to the installation schematics (Fig. 1 and Fig. 2) for routing the control line.

4.3 Strainer (filter)

A strainer installed upstream in the flow pipe holds back any dirt or other foreign particles carried along by the medium. For example, the SAMSON Type 1 N/1 NI Strainer is suitable (▶ T 1010).

➔ Install the strainer upstream of the regulator.

➔ The direction of flow must correspond to the arrow on the body.

➔ The filter element must be installed to hang downwards or sideways for applications with steam. Remember to leave enough space to remove the filter element.

4.4 Shut-off valves

Install a hand-operated shut-off valve both upstream of the strainer and downstream of the regulator. This allows the plant to be shut down for cleaning and maintenance, and when the plant is not used for longer periods of time.

4.5 Pressure gauges

Install a pressure gauge both upstream and downstream of the regulator to monitor the pressures prevailing in the flow pipe and return flow pipe at the point of tapping of the control line.

5 Operation

5.1 Start-up

See Fig. 3 on page 7.

➔ Open all the valves on the consumer side.

➔ Slowly open the shut-off valves.

! ***NOTICE***
The pressure at the actuator must not exceed the nominal pressure by 1.5 times nor the maximum permissible differential pressure Δp across the valve on testing the pressure of the plant when the regulator is already installed.

5.2 Adjusting the set point

Adjust the required differential pressure of Type 45-2 and Type 45-4 by tensioning the springs at the set point adjuster (9).

➔ Turn clockwise (↻): to increase the differential pressure.

➔ Turn counterclockwise (↺): to reduce the differential pressure.

For nominal sizes DN 15 to 32 with set point ranges from 0.1 to 0.5 bar and 0.1 to 1 bar, the set point springs are installed in the bottom section of the valve body. In this case, the set point can be directly adjusted at the manual adjuster (19) according to the scale.

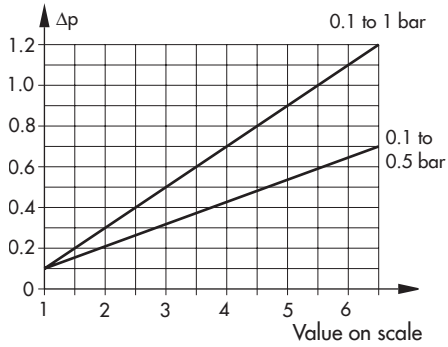

Fig. 4: *Set point adjusted according to the value on the scale*

One turn of the manual adjuster will change the differential pressure by 0.033 bar in the range from 0.1 to 1 bar and by 0.02 bar in the range from 0.1 to 0.5 bar.

Note:
Do not adjust the set point to a value on the scale lower than 1.

Under unfavorable conditions, the set point cannot be adjusted anymore as a result.

To allow the set point to adjusted again, proceed as follows:

➔ Relieve the regulator of pressure.

➔ Turn the manual adjuster counterclockwise ↺ as far as it will go.

➔ Turn the manual adjuster back clockwise ↻ at least past the value 1 to 2 on the scale.

The set point can be adjusted again.

5.3 Decommissioning

Close the shut-off valves starting from the flow pipe (high-pressure line).

6 Maintenance · Troubleshooting

The regulators do not require any maintenance. Nevertheless, they are subject to natural wear, particularly at the seat, plug, and operating diaphragm.
Depending on the operating conditions, check the regulator at regular intervals to avoid possible malfunctions.

⚠ ***WARNING!***
Before performing any work on the regulator, make sure the relevant plant section has been depressurized and, depending on the process medium, drained. We recommend removing the valve from the pipeline.
When used at high temperatures, allow the plant section to cool down to ambient temperature. Disconnect or shut off the control line to prevent the risk posed by moving regulator parts.
As valves are not free of cavities, remember that residual process medium might still be contained in the valve.

Details on faults and how to remedy them can be found in Table 2.

To replace the plug and operating diaphragm, proceed as described in section 6.1 and section 6.2.

Table 2: *Troubleshooting*

Malfunction	Possible reasons	Recommended action
Differential pressure exceeds adjusted set point.	Leak between seat and plug	Remove valve from the pipeline and clean seat and plug. Replace the plug, if possible. If this is not possible, return regulator to SAMSON for repair.
	Defective operating diaphragm	Replace diaphragm or return regulator to SAMSON for repair.
	Control line blocked	Remove control line and clean it.
	Valve too large for control task	Recalculate K_{VS} and contact SAMSON for further action.
Differential pressure set point not reached	Valve too small for control task	Recalculate K_{VS} and contact SAMSON for further action.
	Safety device, e.g. pressure limiter, has been triggered.	Check plant. Unlock safety device.
	Plant differential pressure Δp too low	Compare differential pressure in the plant with the plant's drag.
	Strainer blocked	Drain and clean filter of the strainer.
	Incorrectly installed valve (direction of flow).	Install the valve in such a way that the flow of direction corresponds with the direction indicated by the arrow on the valve body.
Control loop hunts.	Valve too large for control task	Recalculate K_{VS} and contact SAMSON.

If faults cannot be remedied following the recommended action in the table, contact SAMSON (see section 8).

6.1 Cleaning or replacing the plug

See Fig. 3 on page 7.

1. Unscrew the external control line and remove the device from the pipeline.
2. For Type 45-2 and Type 45-4, completely relieve the tension from the springs by turning the set point adjuster (9) or manual adjuster (19) counterclockwise. Unscrew the control line (11) on Type 45-1 and Type 45-2.
3. Unscrew the screws (14) and remove the entire actuator.

   Pull the valve spring (8.1), if installed, out of the valve body.
4. For valve sizes DN 15 to 25, unscrew and pull out the guide nipple of the plug section (3) using a socket wrench (SAMSON order no. 1280-3001).
5. For valve sizes DN 32 to 50, unscrew the stopper first and pull out the plug section.
6. Clean the seat and plug section thoroughly. The entire plug section must be renewed if the plug is damaged.
7. Check the control lines and the borehole in the body (Type 45-3 and Type 45-4) for blockage.

To reassemble, proceed in reverse order. Observe tightening torques specified in Table 1.

6.2 Replacing the operating diaphragm

See Fig. 3 on page 7.

Types 45-1, 45-2, and 45-3

1. Unscrew the external control line and remove the device from the pipeline.
2. Unscrew the control line (11) from Type 45-1 and Type 45-3.
3. Unscrew the screws (14). Remove the bottom diaphragm case (7) together with the diaphragm (6) and diaphragm plate (4) from the body.

   Pull the valve spring (8.1), if installed, out of the valve body.
4. Unscrew the nut (5) and lift off the diaphragm plate. Replace the diaphragm.

To reassemble, proceed in reverse order. Observe tightening torques specified in Table 1.

Types 45-2 and 45-4: version without manual adjuster

1. Unscrew the external control line and remove the device from the pipeline.
2. Completely relieve the tension from the spring(s) by turning the set point adjuster (9) counterclockwise ↺.
3. Unscrew the control line (11) from Type 45-2.
4. Unscrew the screws (14). Remove the bottom diaphragm case together with the actuator parts as well as the diaphragm and diaphragm plate.

5. Unscrew the nut (5) and lift off the diaphragm plate. Replace the diaphragm.

To reassemble, proceed in reverse order. Observe tightening torques specified in Table 1.

Types 45-2 and 45-4: version with manual adjuster

1. Unscrew the control line (11) from Type 45-2.
2. Completely relieve the tension from the springs (10) by turning the manual adjuster (19) counterclockwise until a clicking noise is heard.
3. Unscrew the screws (14). Take off the bottom section (16) of the valve body. Pull the valve spring (8.1) out of the valve body.
4. Unscrew the complete assembly unit (consisting of diaphragm together the diaphragm plates, spring, and support) from the spindle (18) by turning the unit counterclockwise ↺. Pull it out the bottom section of the valve body.
5. After changing the diaphragm, push the assembly unit into the bottom section over the spindle and turn it clockwise ↻ one turn to fasten it onto the spindle.
6. Lift the diaphragm plate to check whether the thread of the spring plate (15) has engaged. If not, turn it once more.
7. Push the valve spring (8.1) into the valve body.

   Align the bottom section of the body with the control line connections and fasten it onto the valve body and evenly tighten the screws (14). Observe the tightening torque specified in Table 1.
8. Screw the control line onto Type 45-2. Observe the tightening torque specified in Table 1.
9. Install the regulator into the pipeline and mount the external control line.
10. Adjust the differential pressure set point according to section 5.2 on page 9.

7 Nameplate

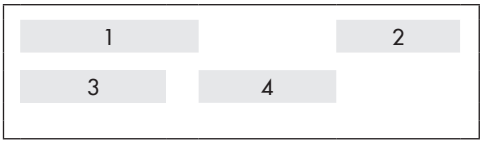

1 Configuration ID (Var.-ID)
2 Type designation
3 Model number
4 Date of manufacture

In the other fields:

Nominal pressure PN or ANSI Class
K_{VS} or C_V coefficient
Max. permissible temperature in °C or °F
Differential pressure set point range in bar or psi
Max. permissible differential pressure Δp in bar or psi

Fig. 5: *Nameplate*

Note:
Conversion from chromate coating to iridescent passivation
We at SAMSON are converting the surface treatment of passivated steel parts in our production. As a result, you may receive a device assembled from parts that have been subjected to different surface treatment methods. This means that the surfaces of some parts show different reflections. Parts can have an iridescent yellow or silver color. This has no effect on corrosion protection.
For further information go to ▶ www.samson.de/chrome-en.html

8 After-sales service

Contact SAMSON's After-sales Service department for support concerning maintenance or repair work or when malfunctions or defects arise.

E-mail

You can reach the After-sales Service Department at aftersalesservice@samson.

Addresses of SAMSON AG and its subsidiaries

The addresses of SAMSON AG, its subsidiaries, representatives, and service facilities worldwide can be found on the SAMSON website (▶ www.samson.de) in all SAMSON product catalogs or on the back of these Mounting and Operating Instructions.

To assist diagnosis and in case of an unclear mounting situation, specify the following details (so far as possible):

- Type and nominal size of the valve (see Nameplate)
- Model number and configuration ID (Var.-ID). See Nameplate.
- Upstream pressure p_1 and downstream pressure p_2
- Temperature and process medium
- Min. and max. flow rate
- Is a strainer installed?
- Installation drawing showing the exact location of the regulator and all the additionally installed components (shut-off valves, pressure gauge, etc.)

9 Dimensions

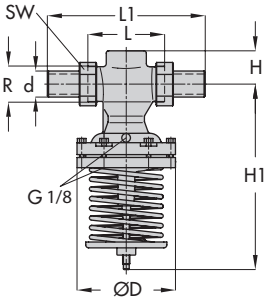

Types 45-2 and 45-4 [1)]
DN 15 to 32 · 0.5 to 2 bar and 1 to 4 bar
DN 40 and 50, all set point ranges

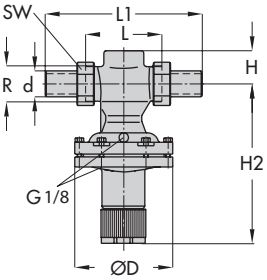

Types 45-2 and 45-4 [1)] · DN 15 to 32
0.1 to 0.5 bar and 0.1 to 1 bar

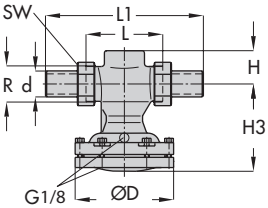

Types 45-1 and **45-3** [1)]

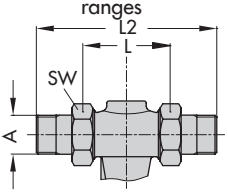

With threaded ends

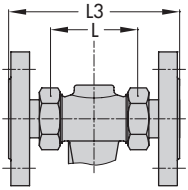

With flanges

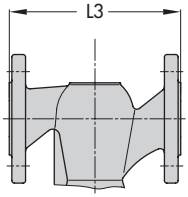

Flanged body
(DN 32, 40, and 50)

[1)] Type 45-4 (45-3) same as Type 45-2 (45-1), except G ⅛ connection on diaphragm case

Fig. 6: *Dimensional drawings*

Dimension tables

Table 3: *Dimensions in mm* · Standard version (with welding ends)

Nominal size DN	15	20	25	32[1]	40[1]	50[1]
Pipe Ø d	21.3	26.8	32.7	42	48	60
Connection R	G ¾	G 1	G 1¼	G 1¾	G 2	G 2½
AF	30	36	46	59	65	82
Length L	65	70	75	100	110	130
H	32			45		
H1	230			250	380	
H2	160			180	–	
H3	85			105	140	
Ø D	116				160	

1) Additional version: valve with flanged body

Note:
The dimensions and weights of valves with flanged bodies (DN 32, 40, and 50) are the same as valves with screwed-on flanges.

Table 4: *Dimensions in mm and weights in kg* · **Including connecting parts**

Nominal size DN		15	20	25	32	40	50
With welding ends							
Length L1		210	234	244	268	294	330
Weight, approx. kg	45-2/-4	2.0	2.1	2.2	8.5	9	9.5
	45-1/-3	1.5	1.6	1.8	4.8	5.3	6.0
With threaded ends							
Length L2		129	144	159	192	206	228
Male thread A		G ½	G ¾	G 1	G 1¼	G 1½	G 2
Weight, approx. kg	45-2/-4	2.0	2.1	2.2	8.5	9.0	9.5
	45-1/-3	1.5	1.6	1.8	4.8	5.3	5.8
With flanges [1] [2] or with flanged body (DN 32 to 50)							
Length L3		130	150	160	180	200	230
Weight, approx. kg	45-2/-4	3.4	4.1	4.7	11.7	13.0	14.5
	45-1/-3	2.9	3.6	4.3	8	9.3	10.8

1) PN 16/25
2) Flanges are already mounted on valves in DN 40 and 50

10 Technical data

Nominal size		DN 15	DN 20	DN 25	DN 32 [1]	DN 40 [1]	DN 50 [1]
K_{VS} coefficient	Standard	2.5	6.3	8	12.5	16	20
	Special version	0.4 · 1.0 4.0	–				
	Flanged body	–			12.5	20	25
x_{FZ} value	Standard	0.6		0.55			0.45
	Flanged body	–			0.45		0.4
Nominal pressure	Types 45-2 and 45-4	PN 25					
	Types 45-1 and 45-3	PN 25 and 16			PN 25		
Max. permissible differential pressure Δp across the valve		20 bar/10 bar [2]				16 bar	
Max. permissible valve temperature		Liquids: 150 °C/130 °C [2] · Air and nitrogen: 150 °C [3]					
Pressure above adjusted set point at which internal excess pressure limiter responds (Types 45-3 and 45-4)		0.5 bar					
Compliance		CE · EAC					
Differential pressure set point ranges							
Types 45-1 and 45-3, fixed set point		0.1 · 0.2 · 0.3 · 0.4 or 0.5 bar					
Types 45-2 and 45-4, continuously adjustable		0.1 to 1 bar · 0.1 to 0.5 bar 0.5 to 2 bar · 1 to 4 bar					0.2 to 1 bar

1) Additional version: valve with flanged body made of spheroidal graphite iron (EN-GJS-400-18-LT)
2) For PN 16 version
3) Diaphragm and seals made of FPM (FKM) · PN 25 version only

SAMSON AG · MESS- UND REGELTECHNIK
Weismüllerstraße 3 · 60314 Frankfurt am Main, Germany
Phone: +49 69 4009-0 · Fax: +49 69 4009-1507
samson@samson.de · www.samson.de

EB 3124 EN

2016-04-29 · English