Flow and Temperature Regulator
Type 2469/2430 K

Fig. 1 · Type 2469/2430 K

Mounting and Operating Instructions

EB 3132-2 EN

Edition November 2011

Contents Page

1	**Design and principle of operation**	4
2	**Installation**	4
2.1	Mounting position	4
2.1.1	Strainer	4
2.1.2	Additional installation instructions	6
2.2	Installing the temperature sensor	6
2.2.1	Capillary tube	6
2.3	Mounting the thermostat	6
3	**Operation**	7
3.1	Start-up	7
3.2	Set point adjustment	8
3.2.1	Flow rate	8
3.2.2	Temperature	8
4	**Maintenance – Replacing parts**	8
4.1	Cleaning or replacing the plug	9
4.2	Replacing the diaphragm	9
5	**Troubleshooting**	10
6	**Description of the nameplate**	11
7	**Customer inquiries**	12
8	**Dimensions in mm and weights**	12

Definitions of the signal words used in these instructions

CAUTION!
indicates a hazardous situation which, if not avoided, may result in injury.

NOTICE
indicates a property damage message.

Note: *Supplementary explanations, information and tips*

General safety instructions

- *The regulator is to be mounted, started up or serviced by fully trained and qualified personnel only, observing the accepted industry codes and practices. Make sure employees or third persons are not exposed to any danger.*
  All safety instructions and warnings in these mounting and operating instructions, particularly those concerning assembly, start-up and maintenance, must be observed.
- *According to these mounting and operating instructions, trained personnel is referred to as individuals who are able to judge the work they are assigned to and recognize possible dangers due to their specialized training, their knowledge and experience as well as their knowledge of the applicable standards.*
- *The regulator fulfils the requirements of the European Pressure Equipment Directive 97/23/EC. Valves with a CE marking have a declaration of conformity that includes information about the applied conformity assessment procedure. The declaration of conformity is available on request.*
- *For appropriate operation, make sure that the regulator is only used in areas where the operating pressure and temperatures do not exceed the operating values specified in the order that the valve sizing data are based on.*
  The manufacturer does not assume any responsibility for damage caused by external forces or any other external influence!
  Any hazards that could be caused in the regulator by the process medium, the operating pressure or by moving parts are to be prevented by means of the appropriate measures.
- *Proper shipping and storage are assumed.*

Note! *Non-electric actuator and valve versions do not have their own potential ignition source according to the risk assessment stipulated in EN 13463-1:2009, section 5.2, even in the rare incident of an operating fault. Therefore, such valve versions* ***do not*** *fall within the scope of Directive 94/9/EC. For connection to the equipotential bonding system, observe section 6.3 of EN 60079-14:2008 VDE 0165-1.*

1 Design and principle of operation

The regulator consists of the Type 2469 Valve with restriction (orifice), seat and plug, the closing actuator with operating diaphragm as well as the thermostat with set point adjuster, capillary tube and temperature sensor.

The regulator is designed to keep the flow rate and temperature constant at the adjusted set point. The valve closes when the controlled variable increases.

Versions for safety equipment are additionally equipped with a Type 2403 Safety Thermostat to function as safety temperature monitors (FR/TR/STM). They can also be equipped with a Type 2439 K Safety Thermostat to function as safety temperature limiters (FR/TR/STL). For further details, refer to the Mounting and Operating Instructions:

EB 2183 EN	for Type 2403 and
EB 2185 EN	for Type 2439 K.

The medium flows through the valve in the direction indicated by the arrow on the body. The flow rate is determined by the area released between the adjustable restriction (1.2) and the valve plug (3).
The high pressure upstream of the restriction is transmitted through the attached control line to the high-pressure side of the actuator. The low pressure created downstream of the restriction acts on the low-pressure side of the operating diaphragm (6.1) through a bore in the plug.
The differential pressure created by the restriction is converted into a positioning force at the operating diaphragm. This force is used to move the valve plug depending on the force of the positioning spring (5).

The medium temperature creates a pressure in the temperature sensor, which is transmitted through the capillary tube (24) to the operating bellows (23) where is it converted into a positioning force. This force moves the coupling rod (8) and thus the valve plug (3) depending on the force of the spring (21) pretensioned by the set point adjuster (22).

The largest signal is used to actuate the valve.

2 Installation

Choose a place of installation where the permissible ambient temperature of 80 °C is not exceeded.

NOTICE
Protect the regulator against frost when it is used to control freezing process media.

2.1 Mounting position

Install the regulator in a horizontal pipeline with the actuator and thermostat vertically suspended (pointing down). Regulators in DN 15 to 25 can also be installed in vertical pipelines.
Use the included connection nuts with welding ends to connect the regulator. Make sure the direction of flow matches the arrow on the valve body.

2.1.1 Strainer

Install a strainer (SAMSON Type 1NI) upstream of the regulator to prevent that any sealing parts, weld spatter and other impurities carried along by the process medium impair the proper functioning of the valve, above all the tight shut-off.

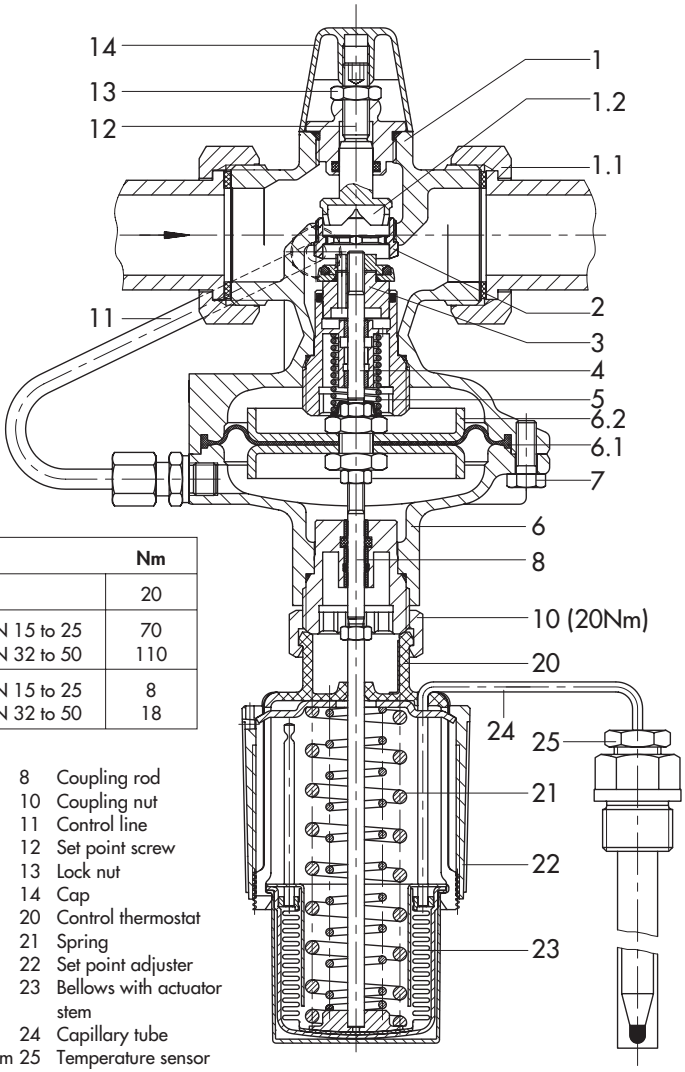

Tightening torques			Nm
10	Coupling nut		20
3	Plug section	DN 15 to 25 DN 32 to 50	70 110
7	Screws	DN 15 to 25 DN 32 to 50	8 18

1 Valve body
1.1 Connection nut with gasket and welding end
1.2 Restriction (orifice plate)
2 Seat
3 Plug section with guide nipple
4 Plug stem
5 Positioning spring
6 Actuator
6.1 Operating diaphragm
6.2 Diaphragm plate
7 Body screws
8 Coupling rod
10 Coupling nut
11 Control line
12 Set point screw
13 Lock nut
14 Cap
20 Control thermostat
21 Spring
22 Set point adjuster
23 Bellows with actuator stem
24 Capillary tube
25 Temperature sensor

Fig. 2 · Sectional drawing

Install the strainer with the direction of flow matching the arrow on the body. Make sure the filter element is vertically suspended. Remember to leave enough space to remove it.

2.1.2 Additional installation instructions

We recommend to install a hand-operated shut-off valve both upstream of the strainer and downstream of the regulator to be able to shut down the plant for cleaning and maintenance.
To monitor the pressures in the plant, install a pressure gauge both upstream and downstream of the regulator.
To check the adjusted set point, we recommend to install a thermometer near the sensor that extends into the process medium.

2.2 Installing the temperature sensor

Refer to Mounting and Operating Instructions EB 2430 EN for details on the Type 2430 K Thermostat and to EB 2430-3 EN for details on the Type 2430 K Thermostat (vapor pressure).

The temperature sensor may be installed in any desired position. Make sure its entire length is immersed in the process medium. Choose a place of installation where neither overheating nor considerable idle times occur.

Weld in a sleeve with G ½ or G ¾ female thread at the place of installation.

Seal the screw gland or thermowell into the welded-in sleeve. Insert the sensor and fasten it with the clamping screw.

NOTICE
To prevent damage caused by corrosion, make sure to use the same kinds of materials when installing a sensor or thermowell. For example, avoid using a thermowell or temperature sensor made of non-ferrous metal in a stainless steel heat exchanger. In this case, the sensor is to be used together with a stainless steel thermowell.

2.2.1 Capillary tube

Install the capillary tube such that no mechanical damage can occur. The smallest permissible bending radius is 50 mm.
Roll up the excess tube to form a ring; never bend or shorten it.
Make sure the capillary tube is not exposed to excessive temperature fluctuations.

2.3 Mounting the thermostat

Place the thermostat on the connection of the actuator and tighten it using the coupling nut (10) and a tightening torque of 20 Nm.

3 Operation

3.1 Start-up

NOTICE
Open the restriction (1.2) used to adjust the flow rate before starting up the regulator.

Fill the plant **slowly**.

CAUTION!
*When pressure-testing the pipelines with the regulator installed, the test pressure must not exceed **1.5 times the nominal pressure**.*

Nominal size DN	15				20	25	32	40 [2]	50 [2]
K_{VS} coefficient	0.4 [1]	1 [1]	2.5	4 [1]	6.3	8	12.5	16/20 [3]	20/25 [3]
Flow rate set point range m^3/h	0.01 to 0.2	0.02 to 0.64	0.02 to 1.2	0.1 to 2.5	0.1 to 3.6	0.1 to 5	0.3 to 10	0.4 to 12.5	0.4 to 15

[1] Special versions [2] Also as version with flanged body [3] K_{VS} with flanged body

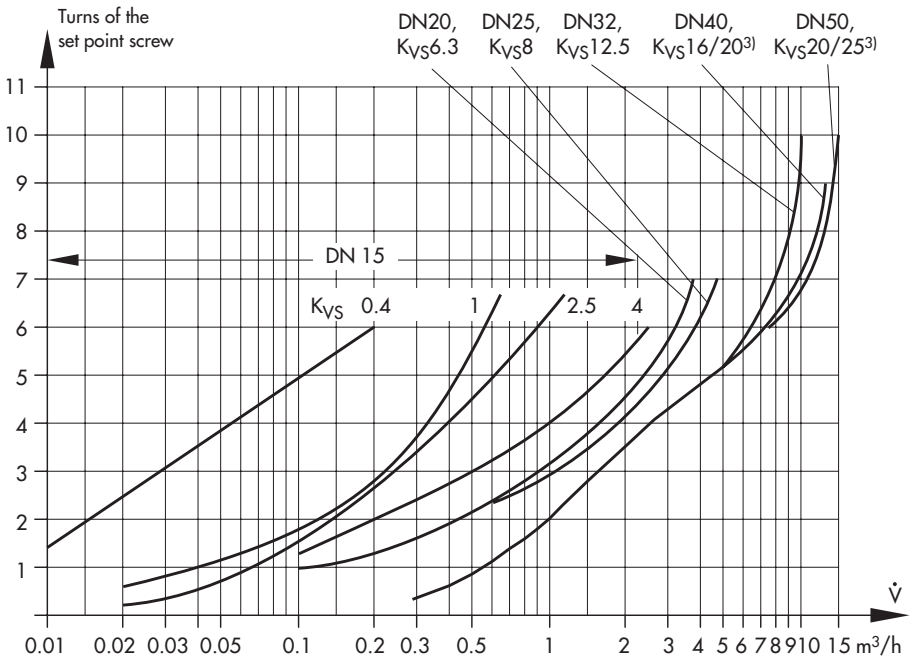

Fig. 3 · Flow rate diagram

3.2 Set point adjustment

3.2.1 Flow rate

Proceed as follows to set or change the flow rate set point:

Unscrew the cap (14).
Loosen the lock nut (13) and turn the set point screw:

- Turn the screw **clockwise** (↻) to **reduce** the flow rate.
- Turn the screw **counterclockwise** (↺) to **increase** the flow rate.

The diagram serves as a guide for flow rate adjustment. The required number of turns of the set point screw is based on a **closed** restriction (1.2).
Refer to the regulator's nameplate for the adjustable set point range. In DN 15, several ranges are possible due to the different flow coefficients (see table).

When the desired flow rate value has been reached, tighten the lock nut and screw the cap back on.

In the **special version with scaled cap**, the set point can be adjusted directly (one scale marking equals one turn of the set point screw).

3.2.2 Temperature

Adjust the set point on the black plastic ring (set point adjuster 22; continuously adjustable) observing the reference thermometer.

- Turn the adjuster **clockwise** to **reduce** (↻) the temperature.
- Turn the adjuster **counterclockwise** (↺) to **increase** the temperature.

The adjusted temperature set point can be lead-sealed through the bore in the set point adjuster.

4 Maintenance – Replacing parts

The regulator is maintenance free. Nevertheless, it is subject to natural wear, particularly at the seat, plug and operating diaphragm.
Depending on the operating conditions, the regulator needs to be checked at regular intervals to detect and remove possible malfunctions.
If the regulator's tight shut-off is impaired, there may be either dirt or natural wear on the seat and plug.
If the flow rate deviates considerably from the adjusted set point, leak-test the operating diaphragm and replace it, if necessary.

CAUTION!

For installation and maintenance work on the regulator, make sure the relevant plant section has been depressurized and, depending on the process medium, drained as well.
For high medium temperatures, allow the plant section to cool down to ambient temperature before starting any work.
We recommend to remove the regulator from the pipeline.

4.1 Cleaning or replacing the plug

1. Remove the regulator from the pipeline.
2. Unscrew the control line (11).
3. Unscrew the body screws (7) and remove the lower diaphragm case including the diaphragm (6.1) and diaphragm plate.
4. For sizes DN 15 to 25, unscrew the guide nipple of the plug section (3) using a socket wrench (order no. 1280-3001) and pull it out.
   This wrench can also be made, for example from a GEDORE screwdriver bit (IN 19-19) by boring a 17-mm-deep hole (Ø 17) into the 19 mm hexagon bit (see Fig. 4)
   For sizes DN 32 to 50, unscrew the stopper and pull out the plug section.
5. Thoroughly clean the seat and plug section.
   Check that the control line is not clogged.
   If the plug is damaged, replace the entire plug section.

▶ Reassemble the regulator in reverse order, observing the tightening torques given in the table in Fig. 2.

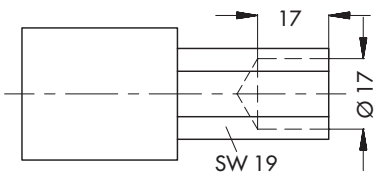

Fig. 4 · Socket wrench

4.2 Replacing the diaphragm

1. Unscrew the control line (11).
2. Unscrew the body screws (7) and remove the lower diaphragm case including the diaphragm (6.1) and diaphragm plate.
3. Replace the diaphragm complete with the diaphragm plate.

▶ Reassemble the regulator in reverse order, observing the tightening torques given in the table in Fig. 2.

5 Troubleshooting

Fault	Possible cause	Solution
Flow rate	Leakage between seat and plug	Remove the regulator from the pipeline. Clean the seat and plug. If necessary, replace the plug (section 4.1). Otherwise, return the regulator to SAMSON for repair.
Flow rate set point exceeded	Operating diaphragm defective	Replace the diaphragm (section 4.2) or return the regulator to SAMSON for repair.
	Control line clogged	Remove the control line and clean it.
	Valve too large for control task	Recalculate the K_{VS} coefficient and contact SAMSON.
Flow rate set point not reached	Set point range incorrectly selected	Check the set point range and contact SAMSON.
	Safety device (e.g. pressure limiter) triggered	Check the plant. Unlock the safety device.
	Insufficient differential pressure across the plant	Compare the existing differential pressure across the plant with the plant drag. Min. differential pressure = differential pressure at restriction + $(V/K_{VS})^2$
	Strainer clogged	Drain the strainer's filter and clean it.
	Valve incorrectly installed	Install the regulator with the direction of flow matching the arrow on the valve body.
Temperature	Leakage between seat and plug	Remove the regulator from the pipeline. Clean the seat and plug. If necessary, replace the plug (section 4.1). Otherwise, return the regulator to SAMSON for repair.
Temperature set point at the sensor exceeded or not reached	Sensor installed in the wrong location	Check that the sensor is fully immersed in the process medium. Check that it is not installed in a place where idle times or heat accumulation occur.
	Safety device (e.g. safety temperature limiter or monitor) triggered	Check the plant. Unlock the safety device.
Temperature set point at the sensor exceeded	Insufficient energy available for heating or cooling	Draw up an energy balance.
	Thermostat defective	Return the thermostat to SAMSON for repair.

Control loop oscillates	Valve too large for control task	Recalculate the K_{VS} coefficient and contact SAMSON.
	Time constant too large for control loop	Fill the thermowell with conductive paste, remove the thermowell and use a sensor with a smaller time constant.

6 Description of the nameplate

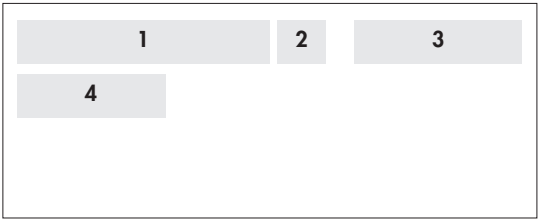

1 Model number
2 Modification index
3 Date of manufacture
4 Type designation

Entries in the other spaces:
K_{VS} or C_V coefficient
Upper differential pressure in bar or psi
Flow rate set point in m^3/h
Max. permissible temperature in °C or °F
Max. permissible differential pressure Δp
Nominal pressure as PN or ANSI Class

Fig. 5 · Nameplate

7 Customer inquiries

If malfunctions or defects occur, contact the SAMSON After-sales Service for support.

The addresses of SAMSON AG, its subsidiaries, representatives and service facilities worldwide can be found on the Internet at www.samson.de, in a SAMSON product catalog or on the back of these mounting and operating instructions.

Include the following details when making inquiries:

- Regulator type and nominal size
- Model number
- Threaded or flange connection
- Upstream and downstream pressures
- Flow rate in m^3/h
- Has a strainer been installed?
- Installation drawing

8 Dimensions in mm and weights

Nominal size	**DN 15**	**DN 20**	**DN 25**	**DN 32**	**DN 40**	**DN 50**
Pipe Ø d	21.3	26.8	32.7	42	48	60
Connection R	G ¾	G 1	G 1¼	G 1¾	G 2	G 2½
Width across flats SW	30	36	46	59	65	82
Length L	65	70	75	100	110	130
Height H	32			45		
Height H1	245			265	295	
Standard version						
Welding ends L1	210	234	244	268	294	330
Approx. weight in kg	2.4	2.5	2.7	4.0	6.2	7.0
Special version with threaded ends (male thread)						
Length L2	129	144	159	180	196	228
Male thread A	G ½	G ¾	G 1	G 1¼	G 1½	G 2
Approx. weight in kg	2.2	2.3	2.4	5.9	6.4	6.9
Special version with flanges PN 16 or PN 25, or version with flanged body (DN 32, DN 40 and DN 50)						
Length L3	130	150	160	180	200	230
Approx. weight in kg	3.6	4.3	4.9	9.1	10.4	11.9

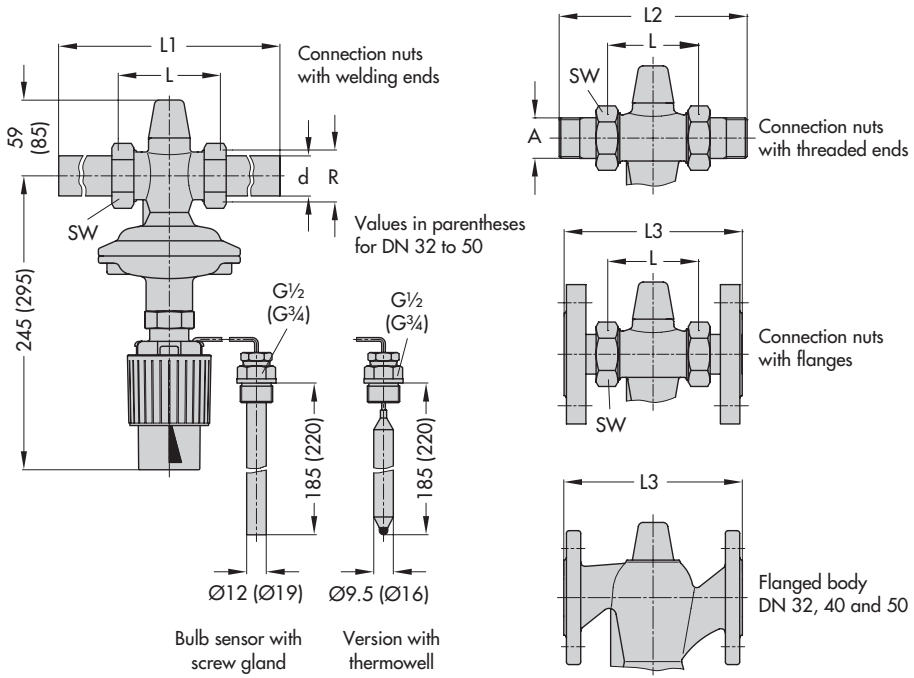

Fig. 6 · Dimensional drawings

SAMSON AG · MESS- UND REGELTECHNIK
Weismüllerstraße 3 · 60314 Frankfurt am Main · Germany
Phone: +49 69 4009-0 · Fax: +49 69 4009-1507
Internet: http://www.samson.de

EB 3132-2 EN

S/Z 2011-12