# Flow Regulators with connection for additional electric actuator and thermostat

## Type 2489/5824
## Type 2489/5825

*Fig. 1 · Type 2489/5825 Flow Regulator with electric actuator and thermostat*

# Mounting and Operating Instructions

## EB 3135-2 EN

Edition November 2012

Contents | Page


| | | |
|---|---|---|
| **1** | **Design and principle of operation** | 4 |
| **2** | **Operation** | 4 |
| 2.1 | Start-up | 4 |
| **3** | **Set point adjustment for flow rate** | 6 |
| 3.1 | Adjustment without actuator | 6 |
| 3.2 | Adjustment with electric actuator | 6 |
| 3.2.1 | Adjustment with Type 5824 Actuator | 6 |
| 3.2.2 | Adjustment with Type 5825 Actuator | 6 |
| **4** | **Dimensions and weights** | 8 |


***Testing***
*The Type 5825 Electric Actuator with fail-safe action is tested by the German Technical Inspectorate (TÜV) in combination with Type 2469 Valve according to DIN EN 14597.*
*Register numbers are available on request.*

***Note:***
*Non-electric actuators and control valve versions do not have their own potential ignition source according to the ignition risk assessment stipulated in EN 13463-1: 2009, section 5.2, even in the rare incident of an operating fault. Therefore, they* ***do not*** *fall within the scope of Directive 94/9/EC.*
*For connection to the equipotential bonding system, observe the requirements specified in section 6.3 of EN 60079-14: 2009 (VDE 0165 Part 1).*

### *General safety instructions*

For your own safety, observe the following instructions on the installation, start up and operation of the regulator:

- *The regulators may only be installed, started up and serviced by fully trained and qualified personnel only, observing the accepted industry codes and practices. Make sure employees or third persons are not exposed to any danger.*
  *All safety instructions and warnings in these instructions, particularly those concerning installation, start-up and maintenance, must be observed.*
- *According to these mounting and operating instructions, trained personnel is referred to as individuals who are able to judge the work they are assigned to and recognize possible dangers due to their specialized training, their knowledge and experience as well as their knowledge of the relevant standards.*
- *The regulator complies with the requirements of the European Pressure Equipment Directive 97/23/EC. The declaration of conformity issued for a regulator bearing the CE marking includes information on the applied conformity assessment procedure and will be provided on request.*
- *To ensure appropriate use, only use the regulator in applications where the operating pressure and temperatures do not exceed the operating values specified in the order.*
- *Note that the manufacturer does not assume any responsibility for damage caused by external forces or any other external factors.*
  *Take appropriate safety precautions to prevent hazards that may be caused in the regulator by the process medium, operating pressure, or moving parts.*
- *Make sure the regulator is shipped and stored properly.*

# 1 Design and principle of operation

The device combination consist of the flow regulator and a Type 5824 or Type 5825 Electric Actuator with fail-safe action together with a thermostat with set point adjuster, capillary tube and temperature sensor.

The basic device, Type 2469/2430 K Flow and Temperature Regulator, is fitted with an adapter for force-locking attachment to an electric actuator. Equipped with an electric actuator, the regulator is able to receive a control signal from an electric control device and to additionally control the temperature by changing the restriction.

The fully equipped regulator is used to keep the flow rate and temperature constant to the adjusted set points. The valve closes as the controlled variable increases.

***NOTICE***
*For valves with nominal sizes DN 15 to 25, the Types 5824-10 and 5825-10 Electric Actuators with a 7.5 mm travel are used.*
*For valves with nominal sizes DN 32 to 50 the Types 5824-20 and 5425-20 Actuators with a 12 mm travel are required.*

***Note:*** *An extension piece (order no. 1690-6975) must be fitted between the adapter and actuator when higher temperatures occur and, as a result, a better insulation at the valve is required.*

# 2 Operation

## 2.1 Start-up

Make sure that the restriction (8.5) is open. If necessary, use the electric actuator to open the restriction. Then fill the plant very slowly on start-up.

Note that actuators with fail-safe action "actuator stem extends" need to be removed from the valve if there is no power available.

***Note:*** *For the mounting and operation of the device combination, read the mounting and operating instructions for the basic device and the following description for the set point adjustment.*

| Type designation | Basic regulator Type | Associated mounting and operating instructions |
|---|---|---|
| 2489/5824 or 2489/5825 | 2469/2430 K | EB 3132-2 EN and EB 5824 EN |

| | |
|---|---|
| 8 | Adapter |
| 8.1 | Orifice stem |
| 8.2 | Set point adjuster |
| 8.3 | Adjustment screw |
| 8.4 | Lead sealing |
| 8.5 | Restriction |
| 10 | Electric actuator |
| 10.1 | Actuator stem |
| 10.2 | Coupling nut |

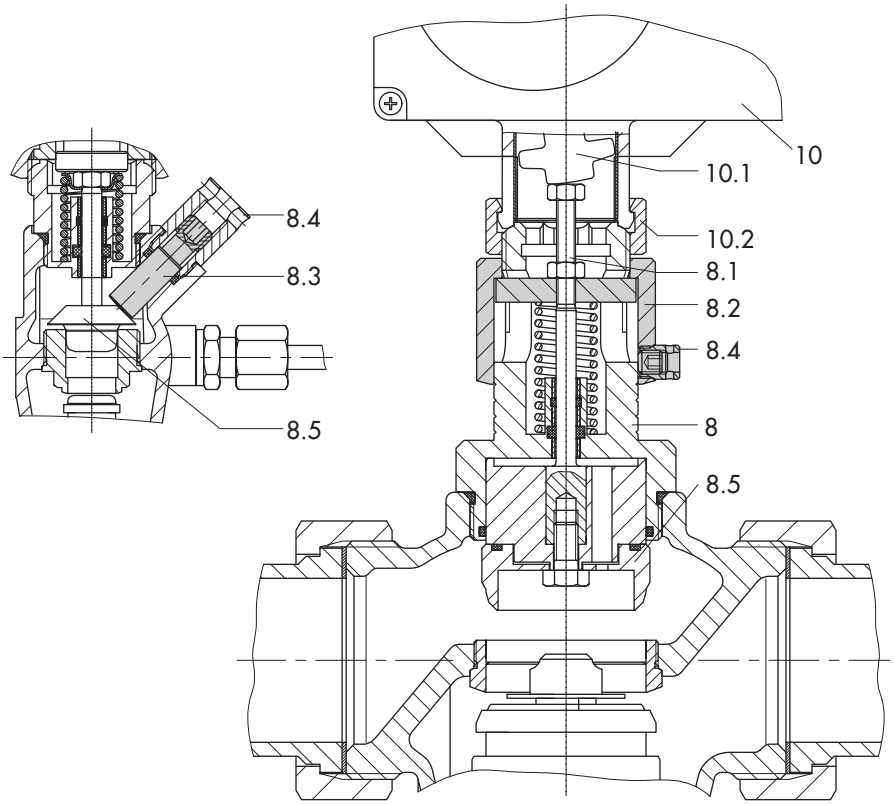


*Fig. 2 · Restriction in valve sizes DN 15 to 25 (left) and DN 32 to 50 (right)*

# 3 Set point adjustment for flow rate

In addition to the description in the mounting and operating instructions for the basic device, the flow rate is adjusted as described below:

The flow rate can be adjusted both when the electric actuator is mounted on the valve and without a mounted electric actuator.

## 3.1 Adjustment without actuator

For nominal sizes DN 15 to 25, use an Allen key (SW4) to adjust the flow rate at the adjustment screw (8.3) at the side. For nominal sizes DN 32 to 50, use the set point adjuster (8.2). Proceed as follows:

1. Turn the adjustment screw (8.3) or set point adjuster (8.2) clockwise as far it will go to close the restriction (for nominal sizes DN 15 to 25, the restriction (8.5) is closed upon delivery of the regulator).
2. From the adjustment diagram (Fig. 3), select how many turns of the set point adjuster or the adjustment screw are required to achieve the required flow rate. (For nominal size DN 15, the proper adjustment characteristic must be determined by referring to the Kvs coefficient on the nameplate).
3. Adjust the flow rate set point by turning the adjustment screw or set point adjuster counterclockwise (based on the closed restriction).
   Check the flow rate and readjust, if necessary.
4. Secure the adjustment screw by lead-sealing it.

## 3.2 Adjustment with electric actuator

***CAUTION!***
*The electric actuator has been designed for use in electrical power installations. Observe the relevant safety regulations for wiring and maintenance work. Only use disconnect devices that are protected against accidental or inadvertent reconnection.*
*Take special care when making adjustments on live parts. Do not remove the covers under any circumstances.*

### 3.2.1 Adjustment with Type 5824 Actuator

1. Retract the actuator stem by turning the handwheel counterclockwise or by applying a corresponding control signal from the control device to the actuator.
2. Continue as described in section 2.1.

### 3.2.2 Adjustment with Type 5825 Actuator

1. Switch actuator to manual mode and change the control signal such that the actuator stem retracts all the way and the spring mechanism is compressed.

If there is no control signal, the actuator can be adjusted manually. For manual adjustment, remove front case cover, insert a 4 mm hexagon wrench into the red adjustment shaft and turn it. Turn counterclockwise only

and only up to the point at which the torque switch in the actuator is activated.
Once the magnet has been released, the spring mechanism pushes the actuator stem back to the fail-safe position.

2. Continue as described in section 2.1.

For valve sizes DN 32 to 50, which are combined with Type 5821/5822 Actuators, the flow rate shown in the diagragm is reduced by approx. 20 %.

***Note:*** *For valve sizes DN 15 to 25, if the restriction (8.5) is to be removed from the regulator, first unscrew and take out the adjustment screw (8.3).*

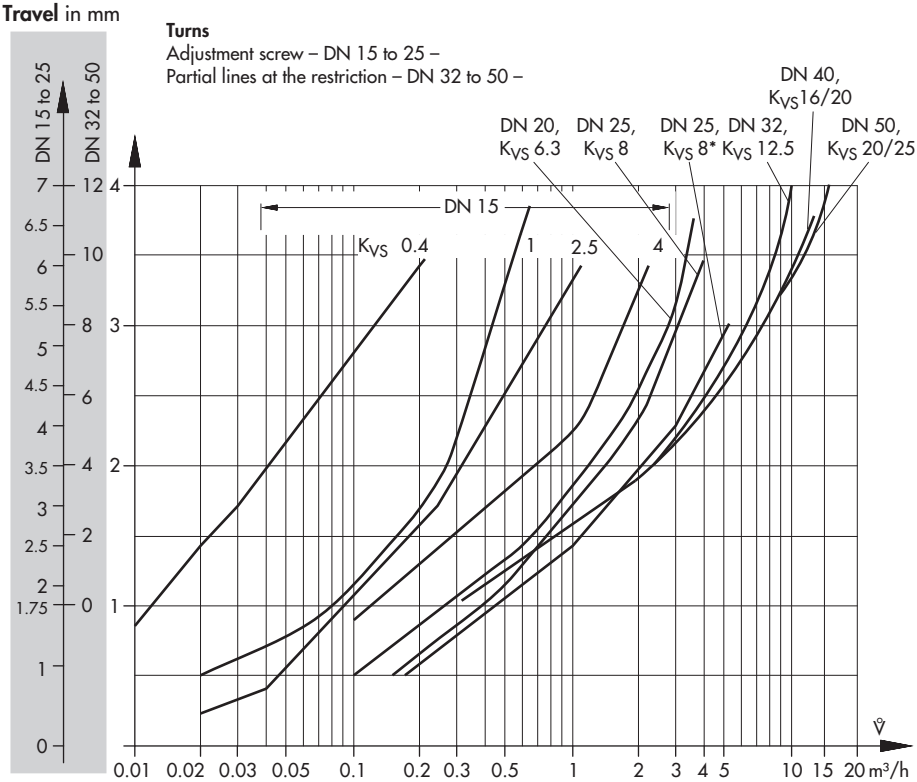


DN 15 to 25: $K_{VS}$ 0.4, 1.0, 2.5, 4.0, 6.3, 8.0 · DN 32: $K_{VS}$ 12.5
DN 40: $K_{VS}$ 16, 20 · DN 50: $K_{VS}$ 20, 25

* Differential pressure Δp at the restriction = 0.3 bar

*Fig. 3 · Diagram for adjusting the flow rate · Differential pressure Δp at the restriction = 0.2 bar*

# 4 Dimensions and weights

| **Nominal size** **DN** | **15** | **20** | **25** | **32** | **40** | **50** |
|---|---|---|---|---|---|---|
| Pipe Ø d | 21.3 | 26.8 | 33.7 | 42 | 48 | 60 |
| Connection thread R | G ¾ | G 1 | G 1¼ | G 1¾ | G 2 | G 2½ |
| Width across flats SW | 30 | 36 | 46 | 59 | 65 | 82 |
| Length L | 65 | 70 | 75 | 100 | 110 | 130 |
| Height H | 155 | | | 196 | | |
| Height H1 Type 2489/582... | 245 | | | 265 | 295 | |
| L1 with **welding ends** | 210 | 234 | 244 | 268 | 294 | 330 |
| Weight, approx. kg Type 2489/582... | 3.9 | 4 | 4.1 | 5.2 | 7.9 | 8.4 |
| **Special version with threaded ends (male thread)** | | | | | | |
| Length L2 | 129 | 144 | 159 | 180 | 196 | 228 |
| Male thread A | G ½ | G ¾ | G 1 | G 1¼ | G 1½ | G 2 |
| Weight, approx. kg | See version with **welding ends** | | | | | |
| **With flanges** PN 16/25 or version with **flanged body** (DN 32, 40 and 50) | | | | | | |
| Length L3 | 130 | 150 | 160 | 180 | 200 | 230 |
| Weight, approx. kg | 5.3 | 6 | 6.6 | 8.4 | 11.9 | 13.4 |

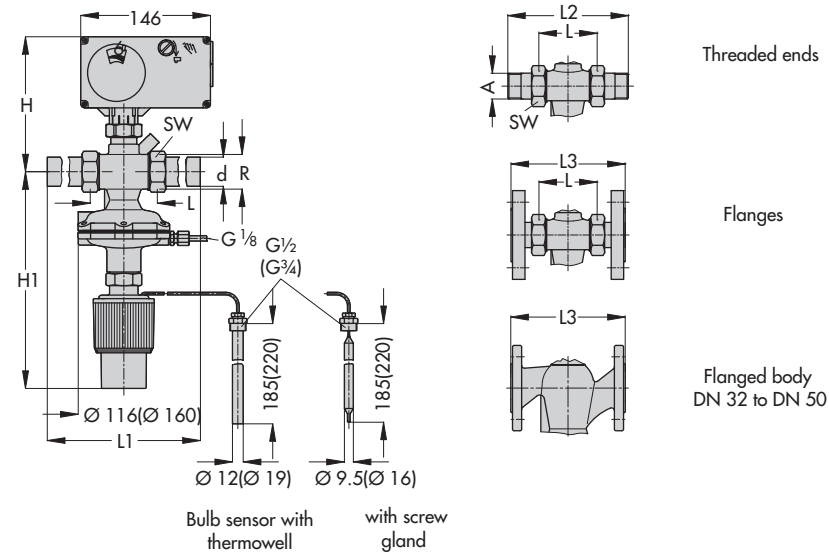


Dimensions in parentheses for DN 40 and 50

**Type 2489/582... with thermostat**

*Fig. 4 · Dimensional drawings*

SAMSON AG · MESS- UND REGELTECHNIK
Weismüllerstraße 3 · 60314 Frankfurt am Main · Germany
Phone: +49 69 4009-0 · Fax: +49 69 4009-1507
Internet: http://www.samson.de

**EB 3135-2 EN**

S/Z 2012-12