Self-operated Temperature Regulators
for special applications

Type 2040 Safety Temperature Monitor (STM)

Application
For cryogenic gases and liquids as well as other liquids, gases and vapors · Set point ranges from **–45 °C** to **+10 °C** Temperature range from **–60 °C** to **+60 °C** · Operating pressure max. **40 bar** · Free of oil and grease

TÜV-typetested
EC type examination (PED)

Industrial gases such as argon, nitrogen and oxygen are stored in liquefied state at a constant pressure in insulated storage vessels. These vessels are connected to consumers by pipes.

To comply with German regulations concerning the safety of pressurized vessels, cryogenic media must be prevented from entering consumer plants which are not designed to handle such low temperatures. The Type 2040 Safety Temperature Monitors (STM) are used for protection in these applications.

These safety temperature monitors close whenever the medium temperature falls below the adjusted set point to prevent cold media entering a connected consumer plant.

Special features
- Self-operated regulators with integrated temperature sensor
- Easy set point adjustment
- Free of oil and grease, suitable for oxygen service [1)]
- Rugged, compact design featuring small dimensions

The Type 2040 Safety Temperature Monitors are characterized by their increased safety. The valve closes automatically when the sensor system is defective.

The use of Type 2040 Safety Temperature Monitors, however, is not only restricted to cryogenic applications. Due to their special design, these devices can also handle gases and liquids under other operating conditions.

Versions
The Type 2040 Safety Temperature Monitor consists of a body, an integrated temperature sensor with a set point adjuster, and the connecting body with G 1¼ A conical joints at both the inlet and outlet.

Soldering nipples and welding ends including connection nuts are available as end connections (see Accessories).

Special version
Set point adjuster with set point indication · Reading in steps of 10 °C indicated by ring marks on the set point adjuster

[1)] With oxygen: p_{max} = 25 bar

Fig. 1 · Type 2040 Safety Temperature Monitor

Principle of operation

The Type 2040 Safety Temperature Monitor (STM) operates according to the liquid expansion principle. The volume of the temperature-sensitive filling medium confined in the integrated temperature sensor (6) expands as the temperature rises and contracts again as the temperature falls.

The regulators close when the temperature falls below an adjusted temperature set point to prevent excessively cold medium from entering the downstream plant.

The safety temperature monitor consists of the body (1) with integrated temperature sensor (6) and set point adjuster (3).

The valve is normally open. If the medium temperature falls below the adjusted set point (when the medium is too cold), the liquid inside the sensor contracts and the tubular plug (5) is pushed by the positioning spring (4) against the soft-sealed seat (2). As the medium temperature drops, the plug moves in the closing direction, restricting the medium flow. If the medium temperature drops further, the valve is closed completely when the temperature reaches the adjusted set point.

The set point temperature and the throttling range in front of it can be adjusted within the set point range. The valve first opens again when the medium temperature has exceeded the adjusted set point by 2 K.

If the sensor system is defective, the valve closes (fail-safe position).

Installation

The following points generally apply:

- The regulator can be installed in any desired position
- The direction of flow must match the arrow on the valve body
- Do not install the regulator directly next to an air vaporizer. Otherwise, the regulator might close due to the low outdoor temperature.

Set point adjustment

The closing function (when the set point is reached) works regardless whether the sensor temperature is determined by the ambient air or the process medium. Therefore, the ambient temperature must be at least 15 K above the target temperature to be adjusted before adjusting the set point. If necessary, insulate the regulator accordingly or warm up the regulator to reach this temperature.

Accessories

Connecting parts: Connection nut with soldering nipple/welding end with either a spherical liner or flat gasket.

Table 1 · Connecting parts with order numbers

Connection	Connecting parts	Order no.
Sealed by a spherical liner	Soldering nipple, red brass, DN 25	1400-6840
	Soldering nipple, brass, DN 15	1400-9182
	Welding ends (stainless steel), DN 25	1400-9129
	Welding ends (stainless steel), DN 15	1400-9183
Sealed by a flat gasket	Soldering nipple, brass, DN 25	1400-9131
	Soldering nipple, brass, DN 15	1400-9130
	Welding ends (stainless steel), DN 25	1400-9181
	Welding ends (stainless steel), DN 15	1400-9180

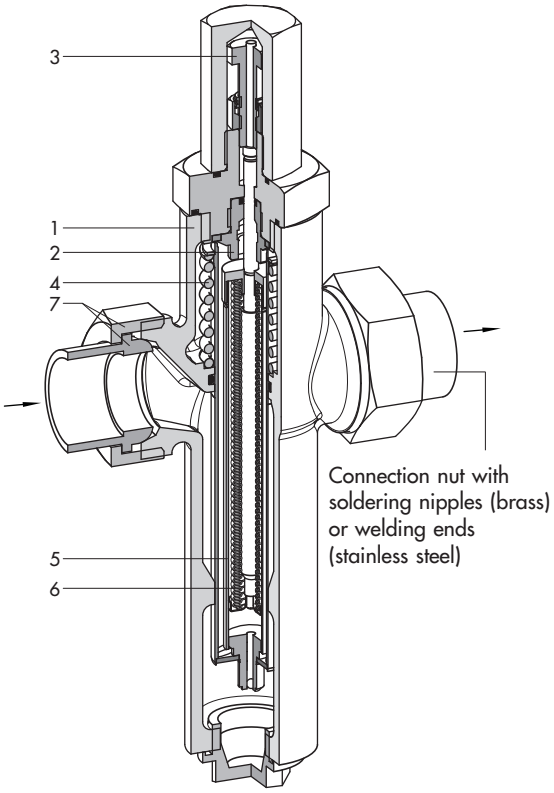

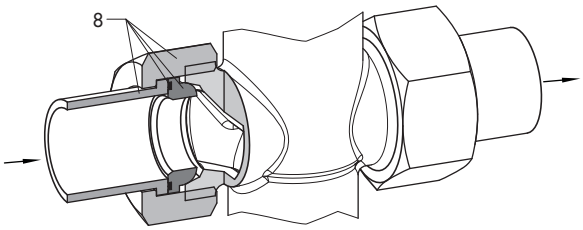

Connection nut with **flat gasket** · Connection with soldering nipples (brass) or welding ends (stainless steel)

Fig. 2 · Functional diagram of Type 2040 Safety Temperature Monitor

1 Body with connection
2 Valve seat with soft sealing
3 Set point adjuster with cover
4 Compression spring
5 Tubular plug
6 Temperature sensor
7 Connection nut with spherical liner (accessories)
8 Connection nut with flat gasket (accessories)

Table 2 · Technical data · All pressures in bar (gauge)

Type 2040 Safety Temperature Monitor	
Body connection	G 1¼ (see Fig. 3 for connecting parts)
K_{VS} coefficient	5
Set point ranges [1]	−30 to +10 °C −45 to −10 °C [2]
Max. perm. operating pressure	40 bar [3]
Max. perm. differential pressure	25 bar
Leakage rate acc. to IEC 60534-4	≤ 0.05 % of K_{VS} at −10 °C ≤ 0.1 % of K_{VS} at −45 °C
Hysteresis	2 K
Accuracy	± 1 °C
Permissible ambient temperature range	−60 to +60 °C [4]
Temperature differential (open/closed)	17 K

1) Temperature set point adjustable within the specified range
2) On request
3) Oxygen service: 25 bar
4) To adjust the set point properly, the ambient temperature must be at least 15 K above the target temperature to be adjusted.

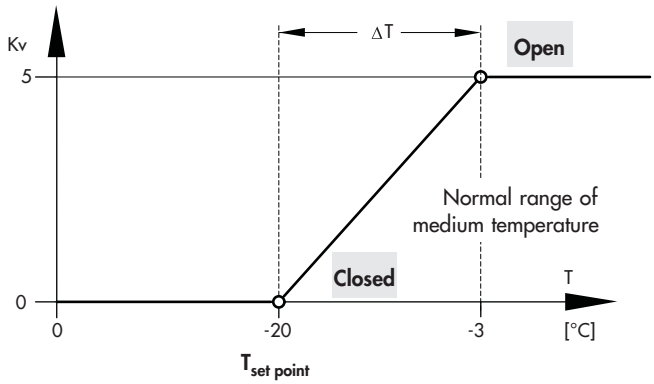

ΔT = 17 K temperature differential between open and closed (throttling range)

$T_{set\ point}$ =−20 °C (point at which the regulator starts to close)

The regulator starts to close when the medium temperature has dropped below a value which is still approx. 17 K above the adjusted set point.

The temperature span between the adjusted temperature set point ($T_{set\ point}$) and the point at which the regulator starts to close is 17 K. The valve is fully open (K_V = 5) at a medium temperature of >$T_{set\ point}$ + 17 K. At a medium temperature less than $T_{set\ point}$ + 17 K the medium flow is already throttled and the K_V coefficient gets smaller.

Fig. 3 · Control behavior

Table 3 · Materials · Material number according to DIN EN

Body	**CC491K** (G-CuSn5ZnPb)
Bellows	CW453K (CuSn8F40)
Spring	1.4310
O-ring	NBR
Seat	CW617N (CuZn40Pb2)/NBR
Tubular plug	1.4571/1.4404

TÜV typetesting/EC type examination

The Type 2040 Safety Temperature Monitors are typetested. The test mark is available on request.

An EC type examination according to Pressure Equipment Directive 97/23/EC, Module B has been performed on the Type 2040 Safety Temperature Monitor.

Dimensions in mm

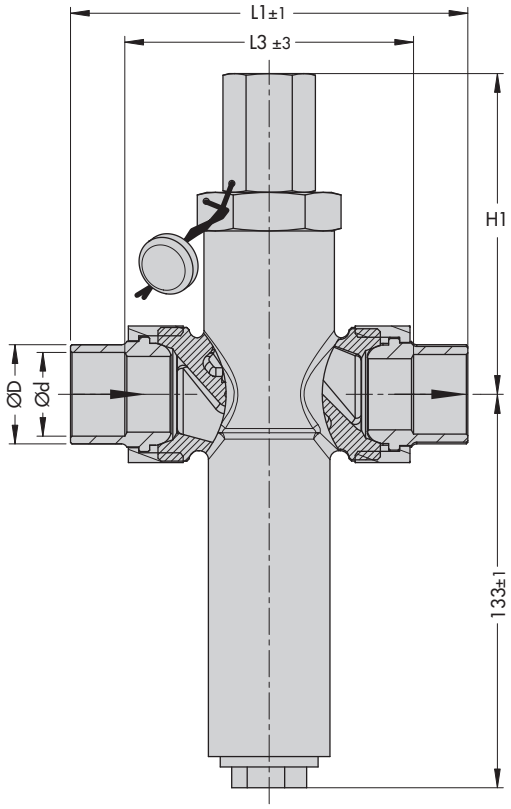

Connecting parts with **spherical liner**

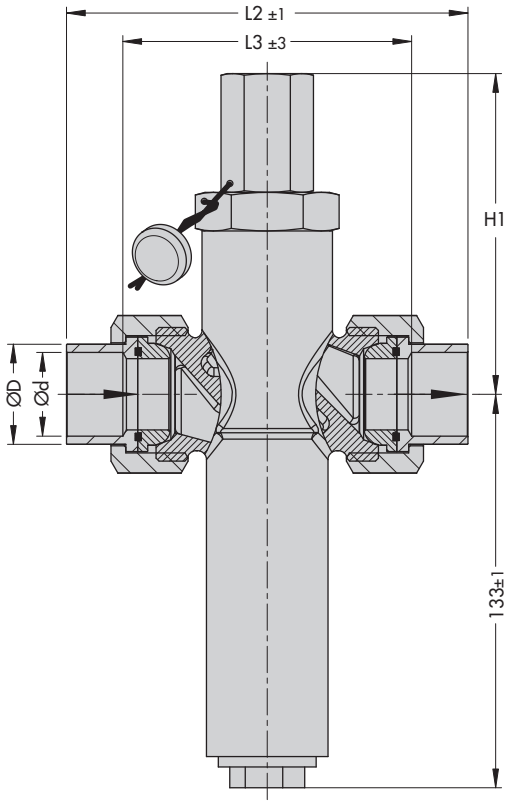

Connecting parts with **flat gasket**

Soldering nipple (brass)

Dimensions in mm	DN 15	DN 25
L3	100	
∅d	For pipe ∅ 16	For pipe ∅ 28

Welding ends (stainless steel)

Dimensions in mm	DN 15	DN 25
L1	155	
L2	165	
∅d	16.1	28.5
∅D	21.3	33.7

Height H1
Without set point indication: H1 = 108 ±1 mm
With set point indication: H1 = 116 ±1 mm

Weight: 1.8 kg (without connecting parts)

Fig. 4 · Dimensions

Ordering text
Type 2040 Safety Temperature Monitor (STM)
Set point range …
Connection …
Optionally, special version

Specifications subject to change without notice

SAMSON AG · MESS- UND REGELTECHNIK
Weismüllerstraße 3 · 60314 Frankfurt am Main, Germany
Phone: +49 69 4009-0 · Fax: +49 69 4009-1507
Internet: http://www.samson.de