Self-operated Temperature Regulators
Typetested Safety Devices Series 43

Application

Control, limitation, safety monitoring and safety limitation of the energy supply to heat generators and heat exchangers which must be equipped with typetested devices.

Note

Devices typetested acc. to DIN EN 14597 are available for installations acc. to DIN 4747-1, DIN EN 12828 and DIN 4753.

The safety devices are used to control and protect indirectly heated heat generators in heating and water-based heating systems.

The temperature regulators, temperature limiters, safety temperature monitors and safety temperature limiters are compulsory according to the relevant regulations (e.g. DIN 4747-1, DIN EN 12828 and DIN 4753) for installations with heat generators or heat exchangers which are heated by steam, hot liquids or by district heating systems. These devices must be tested for reliability and certified accordingly. Therefore the devices listed in this information sheet have been tested by TÜV (German Technical Inspectorate) and licensed with a register number.

Device designations

The designation of the safety devices is laid down in DIN EN 14597 (temperature control and limiting devices for heat generators). The temperatures specified in Figs. 1 to 3 are meant only as a guide to the typical application ranges of the devices shown. The device needed in each case must meet the requirements of the installation and comply with the relevant safety regulations.

Temperature regulators (TR), which have been typetested, are necessary in many installations. They constantly measure the temperature as a controlled variable, compare it with a given set point, adjust the actual temperature to the set point and interrupt the energy supply when the temperature exceeds the set point.

Safety temperature monitors (STM) interrupt the energy supply when the temperature reaches the adjusted limit value, when the capillary tube ruptures or when there is a leak in the sensor (Fig. 3). They reset themselves automatically when the temperature has fallen below the limit value and the fault has been removed.

Safety temperature limiters (STL) interrupt and block the energy supply when the temperature reaches the adjusted limit value, when the capillary tube ruptures or when there is a leak in the sensor (Fig. 1). They can only be reset and put back into operation with a tool when the temperature has fallen below the limit value and the fault has been removed.

Safety temperature monitors and safety temperature limiters are designed for Extended Safety according to DIN EN 14597, since they are also effective even when a defect occurs. The safety temperature limiters are available optionally with a signal transmitter which produces a signal for fault indication.

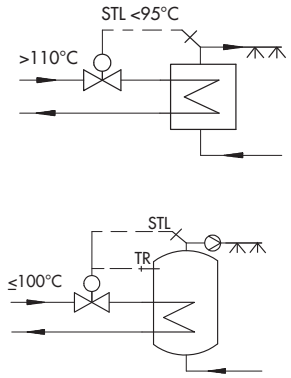

Fig. 1 · DHW heating systems according to DIN 4753

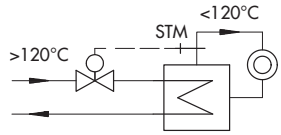

Fig. 2 · Heating installation with safety temperature monitor according to DIN 4747-1

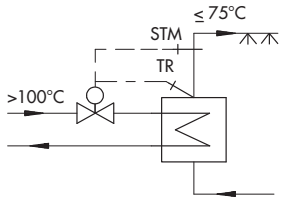

Fig. 3 · Heating installation with temperature regulator and safety temperature monitor according to DIN 4747-1

TR	Temperature regulator
TL	Temperature limiter
STM	Safety temperature monitor
STL	Safety temperature limiter

Associated Data Sheets

T 2171 EN, T 2172 EN, T 2173 EN, T 2178 EN, T 2183 EN and T 2185 EN

Edition March 2012

Typetested safety devices

Versions for G ½ to G 1 · DN 15 to 50 · PN 16 or 25 · Limits up to 120 °C

The regulators and limiters function according to the adsorption principle or the vapor pressure principle.

The temperature-dependent pressure change in the sensor causes the valve plug position to change, thus changing the flow rate of the heating medium.

Table 1 gives an overview of the Series 43 Temperature Regulators.

Time behavior of thermostats

The regulator's dynamics is largely determined by the sensor's response behavior and its typical time constant.

Table 2 shows the time constants of SAMSON thermostats for Series 43 Regulators with varying functioning principles on measuring water.

Table 2 · Time behavior of thermostats

Principle	Type	Without thermowell		With thermowell	
Adsorption	2430 K	15 s [1]	30 s [2]	40 s [1]	80 s [2]
	2439 K	– [3]		40 s	
Vapor pressure	2403 K	3 s		– [3]	

[1] DN 15 to 25 · [2] DN 32 to 50 · [3] Not permissible

Temperature regulators (TR)

Temperature regulators (TR) (Fig. 4) consist of a Type 2430 K Control Thermostat (3) and a valve (1).

They control the temperature and adjust the energy supply when the temperature exceeds the adjusted set point.

Safety temperature monitors (STM)

Safety temperature monitors (STM) (Fig. 5) consist of a Type 2403 K Safety Thermostat (4) and a valve (1).

The safety thermostat not only closes the valve when the temperature reaches its limit value adjustable between 60 to 75 °C, 75 to 100 °C or 100 to 120 °C, but also when the capillary tube ruptures or when there is a leak in the sensor. It resets itself automatically when the fault has been removed and the temperature has fallen below the limit value.

Legend for Figs. 4 to 9
1 Type 2431 K, Type 2432 K, Type 2435 K, Type 2436 K or Type 2437 K Globe Valve
2 Type 2433 K Three-way Valve
3 Type 2430 K Control Thermostat
4 Type 2403 K Safety Thermostat
5 Type 2439 K Safety Thermostat
6 Electric signal transmitter (optional)

Table 1 · Overview of temperature regulators

Type	With **valve**			**Details in**
	Type	Connection size	Nom. press.	Data Sheet
43-1	2431 K	G ½ to G 1	PN 25	T 2171 EN
43-2	2432 K	DN 15 to 50 [2]	PN 25	
43-3	2433 K	G ½ to G 1	PN 25	T 2173 EN
		DN 15 to 50 [2]		
43-5	2435 K	G ½ to G 1	PN 25	T 2172 EN
43-6 [1]	2436 K	G ½ to G 1	PN 16	
		DN 32 to 50 [2]	PN 25	
43-7	2437 K	DN 15 to 50 [2]	PN 25	
43-8	2432 K	DN 15	PN 25	T 2178 EN
Double adapter/manual adjuster				T 2176 EN

[1] Reversed function: Valve opens instead of valve closes
[2] Also with flanged body made of EN-JS1049 or stainless steel (DN 32 to 50)

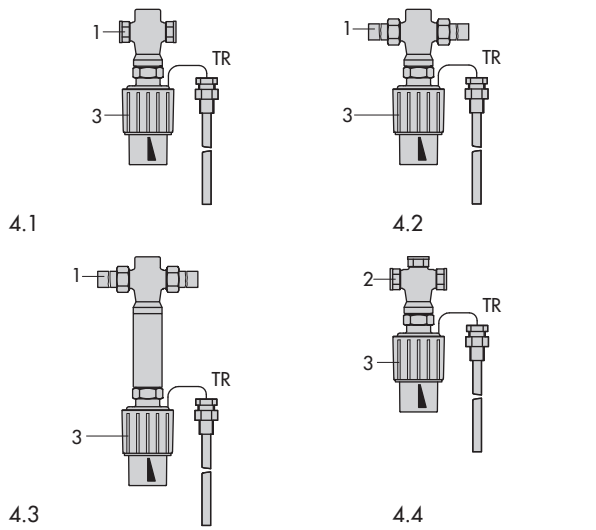

Fig. 4 · Temperature regulators (TR)
4.1 · Type 43-1 or Type 43-5
4.2 · Type 43-2 or Type 43-6
4.3 · Type 43-7
4.4 · Type 43-3

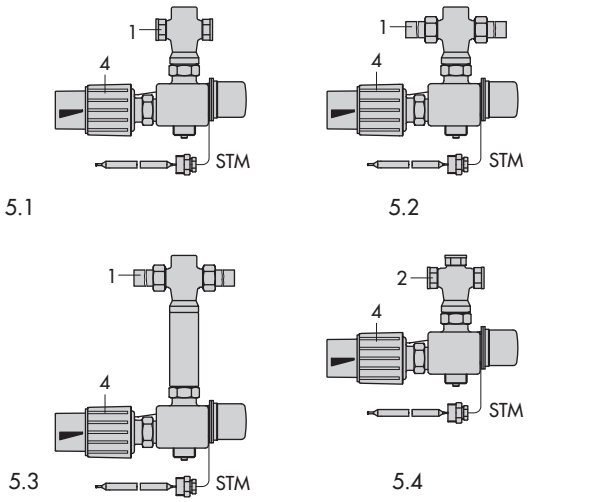

Fig. 5 · Safety temperature monitors (STM) with Type 2403 K Safety Thermostat
5.1 · Type 2431 K/2403 K or Type 2435 K/2403 K
5.2 · Type 2432 K/2403 K
5.3 · Type 2437 K/2403 K or Type 2436 K/2403 K
5.4 · Type 2433 K/2403 K

Temperature regulators (TR) and safety temperature monitors (STM)

The combination TR/STM (Fig. 6) consists of a Type 2403 K Safety Thermostat (4), a Type 2430 K Control Thermostat (3) and a valve (1).

The Type 2430 K Control Thermostat (3), additionally attached to the spring mechanism, functions in this combination as a temperature regulator.

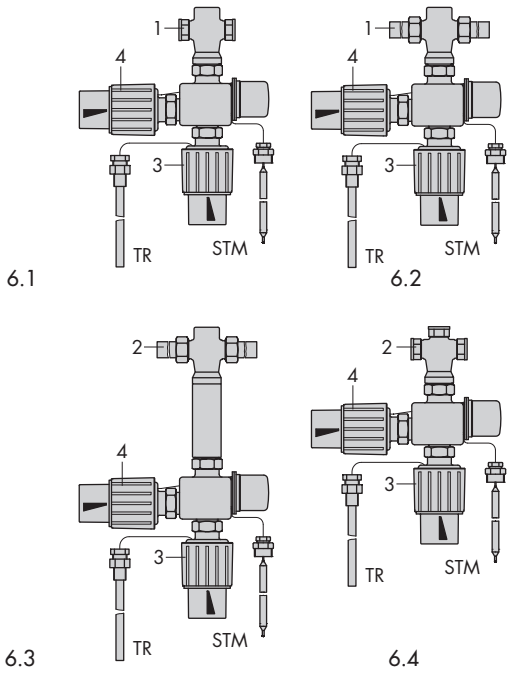

Fig. 6 · Temperature regulators and safety temperature monitors (TR/STM) with Type 2403 K Safety Thermostat and Type 2430 K Control Thermostat

6.1 · Type 2431 K/2430 K/2403 K or Type 2435 K/2430 K/2403 K
6.2 · Type 2432 K/2430 K/2403 K
6.3 · Type 2437 K/2430 K/2403 K or Type 2436 K/2430 K/2403 K
6.4 · Type 2433 K/2430 K/2403 K

Safety temperature limiters (STL)

The safety temperature limiters (STL) (Fig. 7) consist of a Type 2439 K Safety Thermostat (5) and a valve (1).

The spring mechanism in the safety thermostat closes and locks the valve when the temperature reaches the limit value adjustable between 40 to 95 °C or 70 and 120 °C as well as when the capillary tube ruptures or when there is a leak in the sensor.

It can only be reset and put back into operation with a screwdriver when the temperature has fallen below the limit value and the fault has been removed.

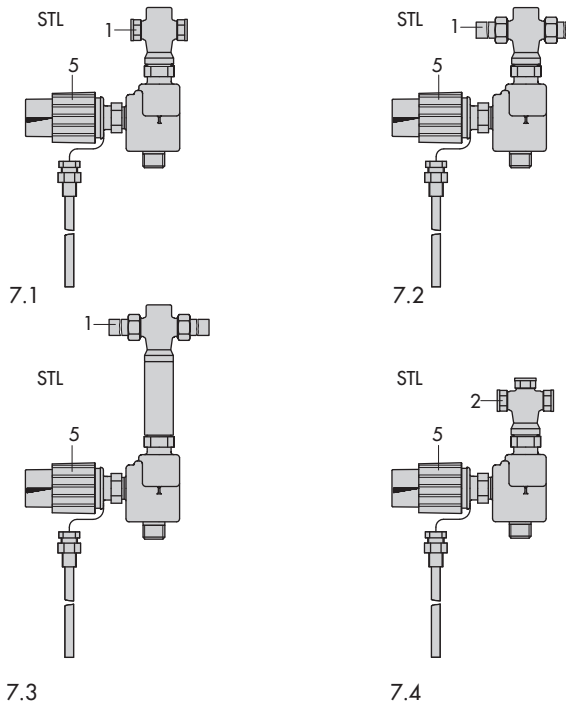

Fig. 7 · Safety temperature monitors (STM) with Type 2439 K Safety Thermostat

7.1 · Type 2431 K/2439 K or Type 2435 K/2439 K
7.2 · Type 2432 K/2439 K
7.3 · Type 2437 K/2439 K or Type 2436 K/2439 K
7.4 · Type 2433 K/2439 K

Typetested regulators conforming to DIN EN 14597

The following typetested regulators are available:

- Temperature regulators (TR) with Type 2430 K Control Thermostat.
- Safety temperature monitors (STM) with Type 2403 K Control Thermostat.
- Safety temperature limiters (STL) with Type 2439 K Safety Thermostat.

The register numbers are available on request.

Further details can be found in the Data Sheet T 2185 EN.

Temperature regulators (TR) and safety temperature Limiters (STL)

The combination TR/STL (Fig. 8) consists of a Type 2439 K Safety Thermostat (5), a Type 2430 K Control Thermostat (3) and a valve (1).

The Type 2430 K Control Thermostat, attached to the Type 2439 K Safety Thermostat, functions in this combination as a temperature regulator (TR).

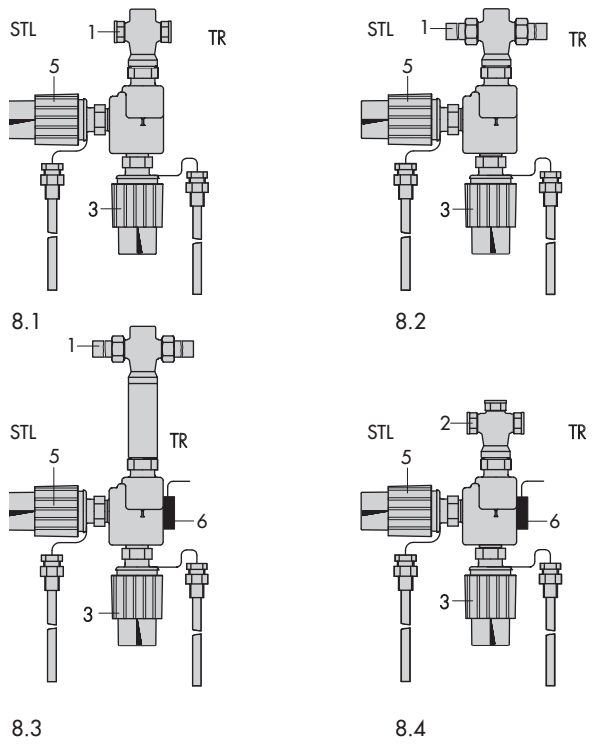

Fig. 8 · Temperature regulators and safety temperature limiters (TR/STL) with Type 2439 K Safety Thermostat and Type 2430 K Control Thermostat

8.1 · Type 2431 K/2430 K/2439 K or Type 2435 K/2430 K/2439 K

8.2 · Type 2432 K/2430 K/2439 K

8.3 · Type 2437 K/2430 K/2439 K or Type 2436 K/2430 K/2439 K

8.4 · Type 2433 K/2430 K/2439 K

Electric signal transmitter

Type 2439 K Safety Thermostat can be supplied with an electric signal transmitter which produces a signal for fault indication (Fig. 9).

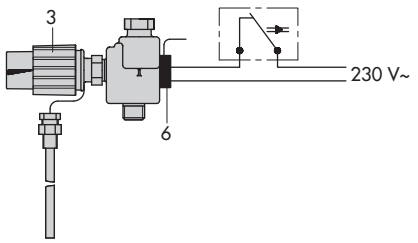

Fig. 9 · Type 2439 K Safety Thermostat with electric signal transmitter (optional, not retrofittable)

Specifications subject to change without notice.

SAMSON AG · MESS- UND REGELTECHNIK
Weismüllerstraße 3 · 60314 Frankfurt am Main · Germany
Phone: +49 69 4009-0 · Fax: +49 69 4009-1507
Internet: http://www.samson.de