Self-operated Pressure Regulators
Type 41-73 Universal Excess Pressure Valve

ANSI version

Application

Pressure regulator for set points from **0.75** to **400 psi** (**0.05** to **28 bar**) · Valves in **NPS** ½ to **4** (**DN 15** to **100**) · Pressure rating **Class 125** to **300** (**PN 16** to **40**) · Suitable for water, gases and vapors up to **660 °F** (**350 °C**)

The valve **opens** when the upstream pressure **rises**.

Special features

- Low-maintenance proportional regulators requiring no auxiliary energy
- Frictionless plug stem seal with stainless steel bellows
- Control line kit for tapping the pressure directly at the valve body (accessories)
- Wide set point range and convenient set point adjustment using a nut
- Exchangeable actuator and set point springs
- Spring-loaded, single-seated valve with upstream and downstream pressure balancing [1] by a stainless steel bellows
- Plug with soft sealing for better shut-off performance
- Low-noise standard plug · Special version with flow divider St I for further noise level reduction (see Data Sheet ▶ T 8081)
- All wetted parts are free of non-ferrous metal

Versions

Excess pressure valve to control the upstream pressure p_1 to the adjusted set point. The valve opens when the upstream pressure rises.

Type 41-73 · Standard version
Type 2417 Valve · Valve in **NPS** ½ to **4** (DN 15 to 100) · Metal-seated plug · Body made of either cast iron A126B, cast steel A216 WCC or cast stainless steel A351 CF8M
Type 2413 Actuator with EPDM rolling diaphragm

Extended versions

Excess pressure valve with increased safety

Actuator with leakage line connection and seal or two diaphragms and diaphragm rupture indicator · Valve with back-up packing

Special versions

- Control line kit for tapping the pressure directly at the valve body (accessories)
- Internal parts made of FPM (FKM), e.g. for use with mineral oils

[1] With $C_V \leq 5/K_{VS} \leq 4$: without balancing bellows

Fig. 1: *Type 41-73 Universal Excess Pressure Valve*

- Free of oil and grease for oxygen with FPM diaphragm
- EPDM diaphragm with PTFE protective foil
- Actuator for remote set point adjustment (autoclave control)
- Bellows actuator for valves NPS ½ to 4 (DN 15 to 100) Set point ranges 30 to 85 psi, 75 to 150 psi, 150 to 320 psi, 300 to 400 psi (2 to 6 bar, 5 to 10 bar, 10 to 22 bar, 20 to 28 bar)
- Valve with flow divider St I for particularly low-noise operation with gases and vapors
- Version entirely of stainless steel
- Stainless Cr steel seat and plug with PTFE soft seal (max. 440 °F/220 °C) · With EPDM soft seal (max. 300 °F/150 °C)
- Version for industrial gases
- Free of oil and grease for high-purity applications
- Stellited seat and plug for low-wear operation
- Wetted plastic parts conforming to FDA regulations (max. 140 °F/60 °C)

Associated Information Sheet ▶ **T 2500**

Associated Data Sheet for accessories ▶ **T 2595**

Edition November 2015

Data Sheet **T 2518 EN**

Principle of operation (Fig. 2)

The medium flows through the valve (1) as indicated by the arrow. The position of the plug (3) determines the flow rate across the area released between plug and valve seat (2). The plug stem (5) with the plug is connected to the stem (11) of the actuator (10).

To control the pressure, the operating diaphragm (12) is tensioned by the set point springs (7) and the set point adjuster (6) so that the valve is closed by the force of the set point springs when it is relieved of pressure ($p_1 = p_2$).

The upstream pressure p_1 to be controlled is tapped upstream of the valve and transmitted over the control line (14) to the operating diaphragm (12) where it is converted into a positioning force. This force is used to move the valve plug (3) according to the force of the set point springs (7).

The spring force is adjustable at the set point adjuster (6).

When the force resulting from the upstream pressure p_1 rises above the adjusted set point, the valve opens proportionally to the change in pressure.

The fully balanced valve has a balancing bellows (4). The downstream pressure p_2 acts on the inside of the bellows, whereas the upstream pressure p_1 acts on the outside of the bellows. As a result, the forces produced by the upstream and downstream pressures acting on the plug are balanced out.

The valves can be supplied with flow divider St I. The valve seat must be replaced on retrofitting the flow divider St I.

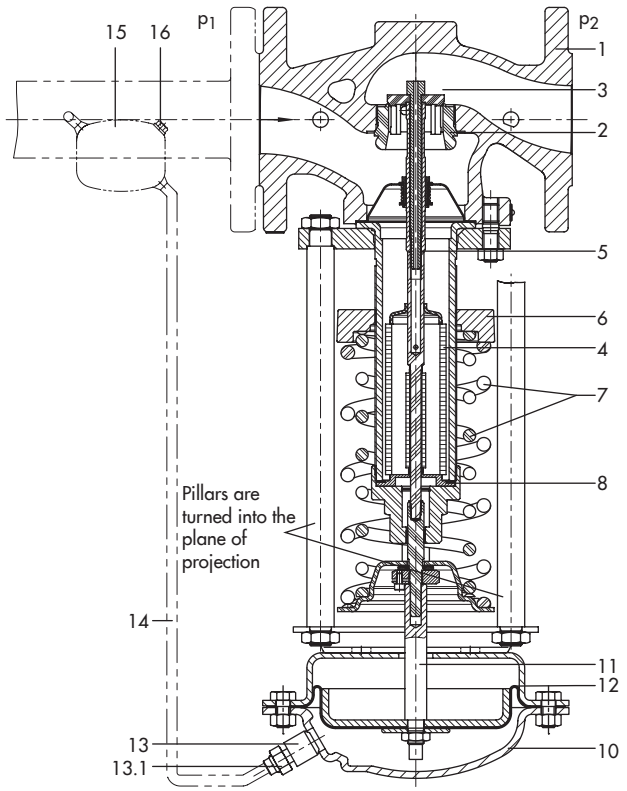

Fig. 2.1: *Functional diagram of Type 41-73 Universal Excess Pressure Valve*

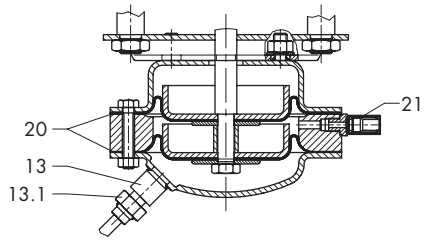

Actuator with two diaphragms and diaphragm rupture indicator

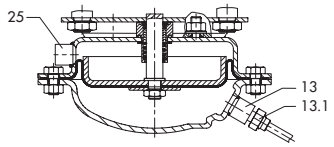

Actuator with leakage line connection

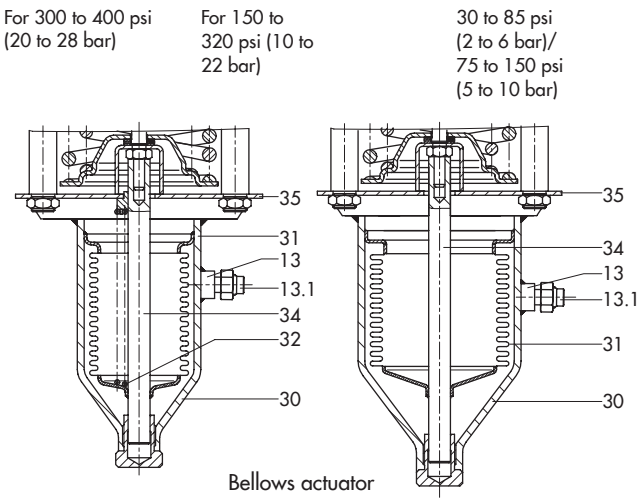

Bellows actuator

Fig. 2.2: *Various versions of Type 2413 Actuator*

1	Valve body (Type 2417)	10	Type 2413 Actuator	20	Diaphragm
2	Seat (exchangeable)	11	Actuator stem	21	Diaphragm rupture indicator
3	Plug (metal-seated)	12	Operating diaphragm with diaphragm plate	25	Leakage line connection G ¼ (with ¼ NPT adapter)
4	Balancing bellows	13	Control line connection G ¼ (with ¼ NPT adapter)	30	Bellows actuator
5	Plug stem	13.1	Screw joint with restriction	31	Bellows with lower section
6	Set point adjuster	14	Control line	32	Additional springs
7	Set point springs	15	Compensation chamber	34	Bellows stem
8	Bellows seal	16	Filler plug	35	Bracket

Fig. 2: *Type 41-73 Universal Excess Pressure Valve*

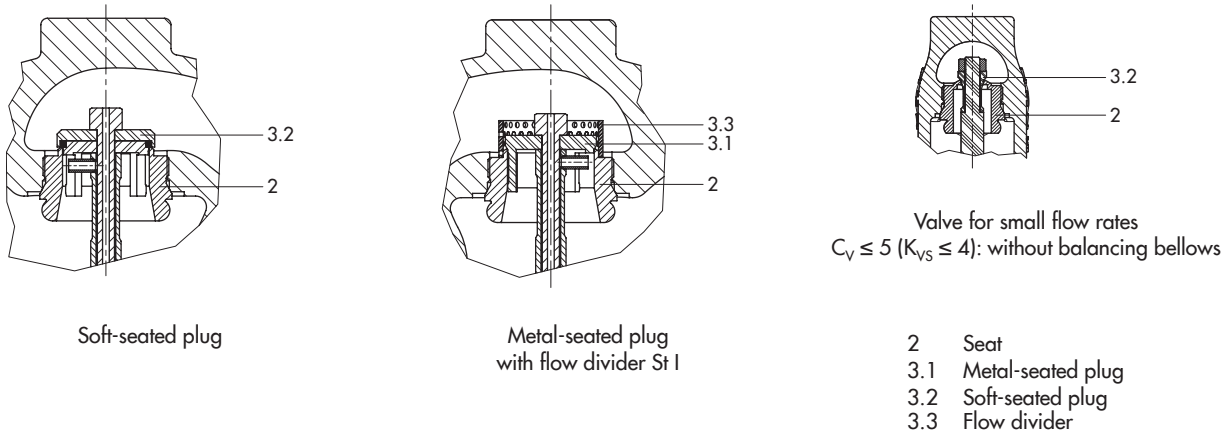

Fig. 3: *Additional features for Type 41-73 Universal Excess Pressure Valve*

Table 1: *Technical data · All pressures in psi and bar (gauge)*

Valve		**Type 2417**		
Nominal pressure	Class	125, 150 or 300		
	PN	16, 25 or 40		
Valve size	NPS	½ to 2	2½ and 3	4
	DN	15 to 50	65 to 80	100
Max. permissible differential pressure	psi	360	290	230
	bar	25	20	16
Temperature ranges		▶ T 2500 · Pressure-temperature diagram		
	Valve plug	Metal seal: max. 660 °F (350 °C) · PTFE soft seal: max. 430 °F (220 °C) EPDM, FPM soft seal: max. 300 °F (150 °C) · NBR soft seal: max. 175 °F (80 °C) [1]		
Leakage class according to ANSI/FCI 70-2		Metal seal: Leakage class I (≤ 0.05 % of C_V/K_{VS}) · Soft seal: Leakage class IV (≤ 0.01 % of C_V/K_{VS})		
Compliance		CE · EAC		
Diaphragm actuator		**Type 2413**		
Set point ranges		0.75 to 3.5 psi · 1.5 to 8.5 psi · 3 to 17 psi · 10 to 35 psi [2] 30 to 75 psi · 65 to 145 psi · 115 to 230 psi		
		0.05 to 0.25 bar · 0.1 to 0.6 bar · 0.2 to 1.2 bar 0.8 to 2.5 bar [2] · 2 to 5 bar · 4.5 to 10 bar · 8 to 16 bar		
Max. permissible temperature		Gases 660 °F (350 °C), however, max. 175 °F (80 °C) at the actuator [1] · Liquids 300 °F (150 °C), with compensation chamber max. 660 °F (350 °C) · Steam with compensation chamber max. 660 °F (350 °C)		
Bellows actuator		**Type 2413**		
Effective area		5.1 sq. in (33 cm²)	9.6 sq. in (62 cm²)	
Set point ranges		150 to 320 psi (10 to 22 bar) 300 to 400 psi (20 to 28 bar)	30 to 85 psi (2 to 6 bar) 75 to 150 psi (5 to 10 bar)	

[1] Max. 140 °F (60 °C) for oxygen
[2] Actuator with two diaphragms: 15 to 35 psi/1 to 2.5 bar

Table 2: *Max. permissible pressure at the actuator*

Set point ranges · Actuator with rolling diaphragm							**Set point ranges** · Actuator with bellows			
0.75 to 3.5 psi (0.05 to 0.25 bar)	1.5 to 8.5 psi (0.1 to 0.6 bar)	3 to 17 psi (0.2 to 1.2 bar)	10 to 35 psi (0.8 to 2.5 bar)	30 to 75 psi (2 to 5 bar)	65 to 145 psi (4.5 to 10 bar)	115 to 230 psi (8 to 16 bar)	30 to 85 psi (2 to 6 bar)	75 to 150 psi (5 to 10 bar)	150 to 320 psi (10 to 22 bar)	300 to 400 psi (20 to 28 bar)
Max. permissible pressure *above* the set point adjusted at the actuator										
9 psi (0.6 bar)	9 psi (0.6 bar)	19 psi (1.3 bar)	36 psi (2.5 bar)	73 psi (5 bar)	145 psi (10 bar)	145 psi (10 bar)	94 psi (6.5 bar)	94 psi (6.5 bar)	116 psi (8 bar)	29 psi (2 bar)

Table 3: *Materials*

Valve	**Type 2417**		
Pressure rating	Class 125 (PN 16)	Class 150 (PN 25) Class 300 (PN 40)	Class 150 (PN 25) Class 300 (PN 40)
Max. permissible temperature	570 °F (300 °C)	660 °F (350 °C)	660 °F (350 °C)
Body	Cast iron A126B	Cast steel A216 WCC	Cast stainless steel A351 CF8M
Seat	CrNi steel		CrNiMo steel
Plug	CrNi steel		CrNiMo steel
Seal with soft-seated plug	PTFE with 15 % glass fiber · EPDM · NBR · FPM		
Guide bushing	PTFE/graphite		
Balancing bellows and bellows seal	Stainless steel 1.4571		
Actuator	**Type 2413**		
Diaphragm cases	Sheet steel DD11 (StW22) [1]		
Diaphragm	EPDM with fabric reinforcement [2] · FPM for mineral oils · NBR · EPDM with PTFE protective foil		

[1] In corrosion-resistant version (CrNi steel) · [2] Standard version; see Special versions for other diaphragms

Installation

Normally, the valve is installed with the actuator suspended downwards. Install pipelines horizontally with a slight downward slope on both sides of the valve for drainage of the condensate.

For further details on installation, see ▶ EB 2517.

The direction of flow must correspond with the arrow on the valve body.

Type 41-73
Standard version

- The control line must be adapted to match the onsite conditions and is not delivered with the valve. On customer request, a control line kit for pressure tapping directly at the valve body (see accessories) is available.

Accessories

Included in the scope of delivery:

- Screw joint with restriction for connection of 3/8″ control line

Additional accessories that can be ordered separately:

- Adapter G ¼ on ¼ NPT, various screw fittings
- Control line kit - optionally with or without compensation chamber - for direct attachment to the valve and actuator (pressure tapped directly at the valve body, for set points ≥ 12 psi (≥ 0.8 bar).
- Compensation chamber for steam condensation and protection of the operating diaphragm against extreme temperatures. This chamber is necessary for steam and liquids above 300 °F (150 °C).

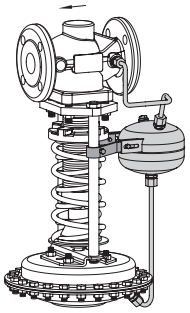

Type 41-73
Control line connection and compensation chamber

Detailed information on accessories can be found in Data Sheet ▶ T 2595.

Ordering text

Type 41-73 Universal Excess Pressure Valve

Additional features ...

Valve size NPS (DN) ..., Class (PN) ...

Body material ...

C_V coefficient (K_{VS} coefficient) ..., set point range ... psi (bar)

Optionally, special version ..., accessories ... (▶ T 2595)

Dimensions – see Table 4 –

Type 41-73 Universal Excess Pressure Valve

Actuator with two diaphragms:
H + 2″ (H + 50 mm)

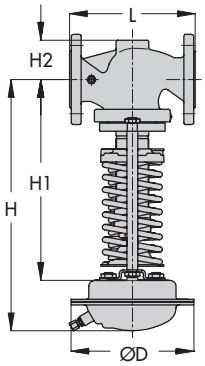

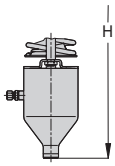

Type 2413 Actuator with bellows

Fig. 4: *Dimensions*

Table 4: *Dimensions and weights*

Excess pressure valve				Type 41-73							
Valve size NPS (DN)				**½ (15)**	**¾ (20)**	**1 (25)**	**1½ (40)**	**2 (50)**	**2½ (65)**	**3 (80)**	**4 (100)**
Length L	Class 125	Inch		–	–	7.25	8.75	10.0	10.87	11.75	13.87
		mm		–	–	184	222	254	276	298	352
	Class 150	Inch		7.25	7.25	7.25	8.75	10.0	10.87	11.73	13.88
		mm		184	184	184	222	254	276	298	352
	Class 300	Inch		7.50	7.63	7.75	9.25	10.50	11.50	12.50	14.50
		mm		191	194	197	235	267	292	318	368
Height H1		Inch		13.19			15.35		20.08		20.67
		mm		335			390		510		525
Height H2		Inch		1.7			2.83		3.86		4.65
		mm		44			72		98		118
Set point ranges psi	**Set point ranges** bar	**Dimensions**		**Dimensions in inches and mm**							
0.75 to **3.5**	**0.05** to **0.25**	Height H		17.52″ (445 mm)			19.69″ (500 mm)		24.41″ (620 mm)		25.0″ (635)
		Actuator		ØD = 15″ (380 mm), A = 100 in² (640 cm²)							
1.5 to **8.5**	**0.1** to **0.6**	Height H		17.52″ (445 mm)			19.69″ (500 mm)		24.41″ (620 mm)		25.0″ (635)
		Actuator		ØD = 15″ (380 mm), A = 100 in² (640 cm²)							
3 to **17**	**0.2** to **1.2**	Height H		16.93″ (430 mm)			18.90″ (480 mm)		23.62″ (600 mm)		24.4″ (620)
		Actuator		ØD = 11.2″ (285 mm), A = 50 in² (320 cm²)							
10 to **35** [2]	**0.8** to **2.5** [2]	Height H		16.93″ (430 mm)			19.09″ (485 mm)		23.82″ (605 mm)		24.4″ (620)
		Actuator		ØD = 8.86″ (225 mm), A = 25 in² (160 cm²)							
30 to **75**	**2** to **5**	Height H		16.10″ (410 mm)			18.31″ (465 mm)		23.03″ (585 mm)		23.62″ (600)
		Actuator		ØD = 6.69″ (170 mm), A = 12 in² (80 cm²)							
65 to **150**	**4.5** to **10**	Height H		16.10″ (410 mm)			18.31″ (465 mm)		23.03″ (585 mm)		23.62″ (600)
		Actuator		ØD = 6.69″ (170 mm), A = 6 in² (40 cm²)							
115 to **230**	**8** to **16**	Height H		16.10″ (410 mm)			18.31″ (465 mm)		23.03″ (585 mm)		23.62″ (600)
		Actuator		ØD = 6.69″ (170 mm), A = 6 in² (40 cm²)							
Weight for version with actuator with rolling diaphragm											
1.5 to **8.3**	**0.05** to **0.6**	Weight, based on Class 150, approx.	lb	51	53		73	80	121	130	158
			kg	23	24		33	36	55	59	72
3 to **35**	**0.2** to **2.5**		lb	39	41		58	68	107	124	146
			kg	18	19		26	31	49	56	66
30 to **230**	**2** to **16**		lb	29	32		51	58	97	114	136
			kg	14	15		23	27	44	52	62
Bellows actuator											
30 to **85**	**2** to **6**	Height H		21.65″ (550 mm)			23.82″ (605 mm)		28.54″ (725 mm)		29.13″ (740)
		Actuator		A = 9.6 in² (62 cm²)							
75 to **150**	**5** to **10**	Height H		21.65″ (550 mm)			23.82″ (605 mm)		28.54″ (725 mm)		29.13″ (740)
		Actuator		A = 9.6 in² (62 cm²)							
150 to **320**	**10** to **22**	Height H		21.06″ (535 mm)			23.23″ (590 mm)		27.95″ (710 mm)		28.54″ (725)
		Actuator		A = 5.1 in² (33 cm²)							
300 to **400**	**20** to **28**	Height H		21.06″ (535 mm)			23.23″ (590 mm)		27.95″ (710 mm)		28.54″ (725)
		Actuator		A = 5.1 in² (33 cm²)							
Weight for version with metal bellows actuator											
A = 5.1 in² (33 cm²)		Weight, based on Class 150 [1]		36 (16.5)	39 (17.9)	40 (18)	56 (25.5)	64 (29)	106 (48)	123 (56)	146 (66)
A = 9.6 in² (62 cm²)				46 (20.9)	47 (21.5)	49 (22)	65 (29.5)	73 (33)	119 (54)	143 (65)	165 (75)

[1] +10 % for Class 300
[2] Actuator with two diaphragms: 15 to 35 psi/1 to 2.5 bar

Table 5: *C_V (K_{VS}) coefficients and x_{FZ} values · Terms for noise level calculation according to VDMA 24422 (edition 1989-01)*

Valve size	$C_V \cdot K_{VS}$ [1] Standard		x_{FZ}	$C_V \cdot K_{VS}$ [1] Special version		x_{FZ}	C_V I · K_{VS} I With flow divider	
NPS | DN	C_V	K_{VS}		C_V	K_{VS}		C_V I	K_{VS} I
½ | 15				1.2	1	0.6		
	5	4	0.5				3.5	3
¾ | 20				1.2	1	0.6		
				5	4	0.5		
	7.5	6.3	0.45				6	5
1 | 25				1.2	1	0.6		
	9.4	8	0.4	5	4	0.5	7	6
1½ | 40				5 · 9.4	4 · 8	0.5 · 0.4		
	23	20	0.4				17	15
2 | 50				5 · 9.4	4 · 8	0.5 · 0.4		
	37	32	0.4				30	25
2½ | 65				37 [2]	32 [2]	0.4		
	60	50	0.4				45	38
3 | 80				37 [2]	32 [2]	0.4		
	94	80	0.35				49	42
4 | 100				94	80	0.4		
	145	125	0.35				77	66

[1] For $C_V \leq 5/K_{VS} \leq 4$: without balancing bellows

[2] Max. permissible differential pressure 363 psi (25 bar)

Valve-specific correction terms

ΔL_G · For gases and vapors:

Values as specified in the diagram

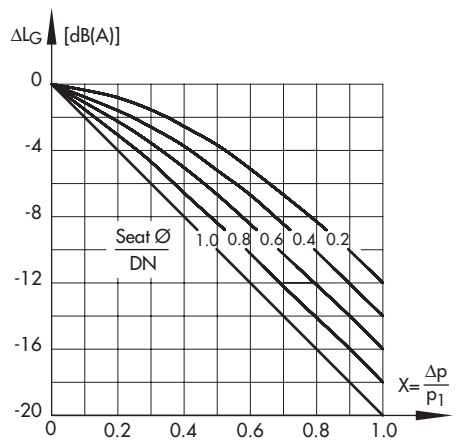

Fig. 5: *Diagram - ΔL_G for gases and vapors -*

ΔL_F · For liquids:

$$\Delta L_F = -10 \cdot (x_F - x_{FZ}) \cdot y$$

$$\text{with } x_F = \frac{\Delta p}{p_1 - p_V} \text{ and } y = \frac{K_V}{K_{VS}}$$

Terms for control valve sizing according to IEC 60534, Parts 2-1 and 2-2:

$F_L = 0.95$

$X_T = 0.75$

x_{FZ} · Acoustical valve coefficient

C_V I, K_{VS} I · When a flow divider St I is installed as a noise-reducing component · Flow characteristic differences between valves with and valves without flow dividers do not occur until the valve has passed through approx. 80 % of its travel range.

Specifications subject to change without notice

SAMSON AG · MESS- UND REGELTECHNIK
Weismüllerstraße 3 · 60314 Frankfurt am Main, Germany
Phone: +49 69 4009-0 · Fax: +49 69 4009-1507
samson@samson.de · www.samson.de

2015-12-10 · English