Self-operated Pressure Regulators

Pressure Reducing Valve Type 2407

Application

Pressure reducing valve for set points from **5 mbar** to **1000 mbar** · Valves with flanged body **DN 15** and **DN 25** as well as with female thread **G ½, G ¾** and **G1** · Nominal pressure **PN 25** · Suitable for gases at temperatures from **–20** to **+60 °C** (**0** to **150 °C**) [1)]

This regulator is used to control the pressure of flammable gases used as a source of energy, e.g. in boilers, driers, vaporizers, heat exchangers or industrial ovens. Alternatively, it can control the compressed air supply in process engineering applications.

An additional application of the regulator is the pressure control of inert gas used for inerting or blanketing reaction or storage tanks to protect the product in the tank from oxidation, explosion or escaping.

To achieve an economical consumption of the inert gas, its pressure must be controlled to always remain slightly higher than atmospheric pressure while the tank is being filled or emptied.

Special features

- Low-maintenance proportional regulators
- Compact regulator design providing excellent control accuracy
- Internal set point springs with set point adjustment using a nut on the actuator
- Spring-loaded, single-seated valve
- Connection G ¼ for control line
- Fulfills stricter fugitive emission requirements (TA-Luft)
- Min. leakage class IV
- Suitable for vacuum

Versions

Valve in G ½, G ¾ and G 1, DN 15 and DN 25 · Soft-seated plug · Body made of stainless steel 1.4408 or spheroidal graphite iron EN-JS1049

Special versions

- Version with FDA-compliant materials for food processing and pharmaceutical industries
- Version to comply with NACE (sour gas)

1) Version with soft seal and diaphragm made of FPM for air and nitrogen

Fig. 1 · Type 2407 Pressure Reducing Valve

Principle of operation

The medium flows through the valve as indicated by the arrow. The position of the valve plug and the area released between the plug (3) and seat (2) determine the flow rate.

In the pressureless state (control line not connected and no pressure applied) the valve is opened by the force of the set point springs (9).

The downstream pressure p_2 to be controlled is tapped downstream of the valve and transmitted over an external control line to the actuator where it is converted by the operating diaphragm (7) into a positioning force. This force is used to move the valve plug according to the force of the set point springs (9). The spring force can be adjusted at the set point adjuster (8).

When the force resulting from the downstream pressure p_2 rises above the adjusted set point, the valve closes proportionally to the change in pressure.

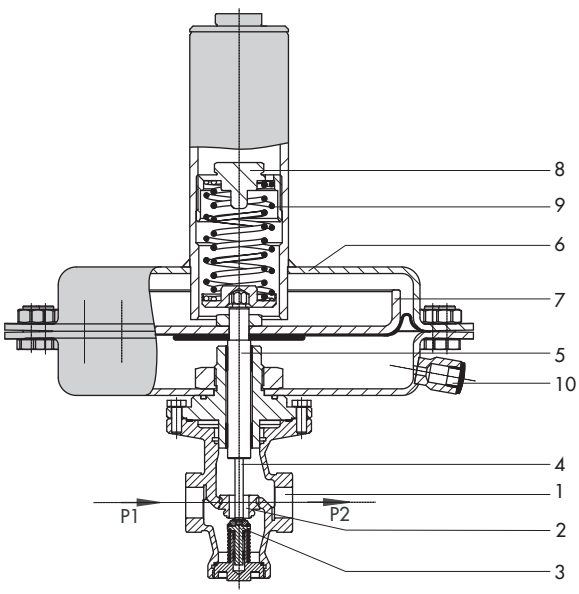

1 Valve body
2 Seat
3 Plug
4 Plug stem
5 Actuator stem
6 Actuator housing
7 Diaphragm plate with diaphragm
8 Set point adjuster (adjusting screw SW 27)
9 Set point springs
10 Control line connection G ¼
(downstream pressure p_2)
Turned by 90° in the drawing. The connection is usually located on the left of the valve when viewed from the flow direction.

Fig. 2 · Functional diagram of Type 2407

Installation

Preferably the regulator is to be installed in horizontal pipelines:

- Actuator housing on top of the valve, facing upwards
- The direction of medium flow must correspond with the arrow on the valve body.
- In applications in which the blanketing gas can liquefy, condensate may form in the control line, causing damage to the regulator. To allow condensate to run back into the tank, install the control line with an approximate 10 % slope to the pressure tapping point at the tank.
- Distance between the pressure tapping point and regulator min. 6 x DN.

In exceptional cases, the regulator can also be installed in vertical pipelines with the direction of flow from the top. Refer to EB 2524 EN for more details.

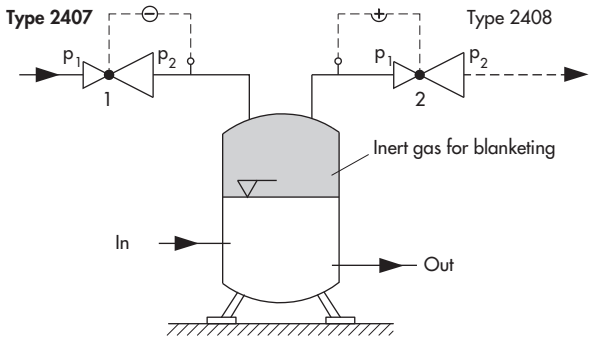

If the pressure p of the inert gas in the tank falls below the set point adjusted at the **Type 2407** Pressure Reducing Valve (1), it opens to allow more gas to enter the tank. The valve (1) closes again when the pressure p of the blanketing gas has been re-established. If the pressure is too high, the inert gas is vented off over the Type 2408 or Type 2406 Excess Pressure Valve (2).

Fig. 3 · Typical application, Type 2407 used for tank blanketing

Table 1 · Technical data · All pressures stated as gauge pressure in bar

Nominal size	**G ½, G ¾ and G1 · DN 15 and DN 25**
Nominal pressure	PN 25
Control line connection for 8 x 1 mm pipe	G ¼
K_{VS} coefficients	0.25 · 0.4 · 1.0 · 2.5 · 3.2 [1] · 5.0 [1]
Max. perm. differential pressure Δp	6 bar
Max. perm. pressure at the actuator Actuator area A = 1200 cm² Actuator area A = 640 cm² Actuator area A = 320 cm² Actuator area A = 160 cm²	 0.5 bar 1 bar 2 bar 4 bar
Max. perm. temperature range (medium temperature)	–20 to +60 °C (0 to 150 °C) [2]
Leakage class acc. to IEC 60534-4	Soft-seated plug, minimum class IV
Set point ranges	5 to 15 mbar · 10 to 30 mbar · 25 to 60 mbar · 50 to 200 mbar 100 to 1000 mbar

1) Only in conjunction with 100 to 1000 mbar set point range

2) Version with FPM soft seal and FPM diaphragm for air and nitrogen

Table 2 · Materials · Material number acc. to DIN EN

Body	**Stainless steel 1.4408** – Body with screwed ends –	**Spheroidal graphite iron EN-JS1049** – Flanged body –
Seat	1.4404	1.4305
Plug	1.4404 with soft sealing	
Plug sealing	EPDM · FPM · NBR	
Operating diaphragm	EPDM · FPM · NBR	
Positioning spring and set point springs	1.4310K	
Actuator housing	1.4301	1.0039

Dimensions

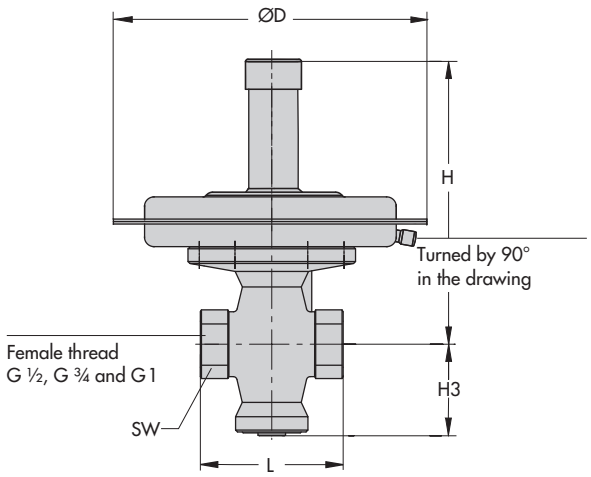

Type 2407 · Stainless steel body with screwed ends

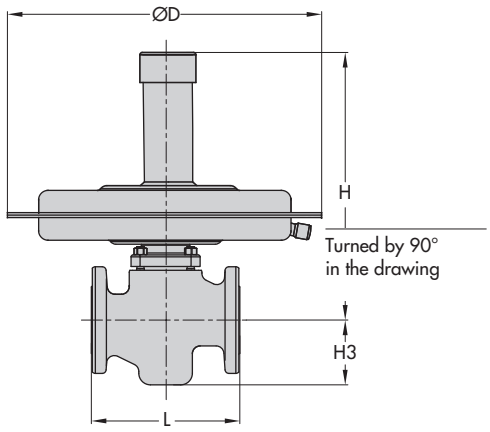

Type 2407 · Flanged body made of spheroidal graphite iron

Table 3 · Dimensions in mm and weights in kg

Connection size		G ½	G ¾	G 1	DN 15	DN 25
Female thread		G ½	G ¾	G 1	–	–
Face-to-face dimension L		65	75	90	130	160
Width across flats SW		34	34	46	–	–
Height H3		45				
5 to 15 mbar	Height H	360				
	Actuator	Actuator ∅ D = 490 mm, A = 1200 cm²				
10 to 30 mbar	Height H	360				
	Actuator	Actuator ∅ D = 380 mm, A = 640 cm²				
25 to 60 mbar	Height H	360				
	Actuator	Actuator ∅ D = 380 mm, A = 640 cm²				
50 to 200 mbar	Height H	360				
	Actuator	Actuator ∅ D = 285 mm, A = 320 cm²				
100 to 1000 mbar	Height H	360				
	Actuator	Actuator ∅ D = 225 mm, A = 160 cm²				
Weight in kg, approx.	Set point range 5 to 60 mbar	15.5	15.7	15.9	17	18
	Set point range 50 to 1000 mbar	12	12.2	12.4	13.5	14.5

Fig. 4 · Dimensional drawings of Type 2407

Ordering text

Pressure Reducing Valve Type 2407

Nominal size DN ..., thread size G ...,
Set point range … mbar, K_{VS} coefficient …

Body material …

Optionally, special version

Material:
Plug sealing ..., operating diaphragm …

Specifications subject to change without notice.

SAMSON AG · MESS- UND REGELTECHNIK
Weismüllerstraße 3 · 60314 Frankfurt am Main · Germany
Phone: +49 69 4009-0 · Fax: +49 69 4009-1507
Internet: http://www.samson.de