Self-operated Pressure Regulators

Type 36-3 Safety Shut-off Valve (SSV) with Pressure Reducing Valve
Type 36-8 Safety Excess Pressure Valve (SEV)

Typetested for water **by TÜV**

Application

Pressure regulators for set points from **2** to **11 bar** · Valve nominal sizes **DN 15** to **100** · Nominal pressure **PN 16** to **40**
Suitable for water and liquids up to **150 °C**

Typetested by TÜV CE

Special features

- Low-maintenance proportional regulators requiring no auxiliary energy
- Spring-loaded, single-seated valve with balanced plug
- Frictionless plug stem seal with stainless steel bellows
- Actuator with two independent operating diaphragms, permitting continued operation of the valve even if one diaphragm fails. An indicator at the actuator shows that the actuator is damaged.
- Especially suitable for applications in district heating plants designed in accordance with DIN 4747-1. The regulators comply with AGFW (German District Heating Association) regulations.

Versions (see Fig. 2 and Fig. 3)

Type 36-3 · Safety shut-off valve (SSV) with integrated pressure reducing valve (Fig. 1) · The regulator controls the downstream pressure p_2 to the adjusted set point · The regulator continues to operate in the event of an operating diaphragm rupture.

Type 36-8 · Safety excess pressure valve (SEV) (Fig. 2) · The regulator controls the upstream pressure p_1 to the adjusted set point · The regulator continues to operate in the event of an operating diaphragm rupture.

Special version (not typetested by TÜV)

– With internal parts made of FPM (FKM), e.g. for use with mineral oils or air

– ANSI version on request

Ordering text

Type 36-3 Safety Shut-off Valve with pressure reducing valve or **Type 36-8 Safety Excess Pressure Valve**

DN ...

Body material ..., PN ...

Set point range ... bar

Optionally, special version ...

Fig. 1: *Type 36-3 Pressure Reducing Valve*

Fig. 2: *Type 36-8 Excess Pressure Valve*

Associated Information Sheet ▶ **T 2500**

Edition October 2015

Data Sheet **T 2546 EN**

Principle of operation

The medium flows through the valve in the direction indicated by the arrow. The position of the plug determines the flow rate across the area released between plug (3) and seat (2).

The pressure to be controlled is transmitted to the diaphragm (9) over a control line (12) and converted into a positioning force. This force moves the plug stem (4) and the valve plug (3) with it, opposing the force of the set point springs (7). The spring force (pressure set point) can be adjusted at the set point adjuster (6).

The regulators are equipped with two independent operating diaphragms (9). This permits continued operation of the valve even if one diaphragm fails.

A diaphragm rupture indicator or optionally a pressure switch is installed in the hole in the intermediate ring (10). A red mark indicates a diaphragm rupture. A pressure switch triggers an optical or acoustic signal, for example, in a control room.

Type test

The regulators are typetested for water by the German Technical Inspectorate (TÜV). The test mark is available on request.

Installation

Install the regulator in horizontal pipelines.

The following points must be observed:

- The direction of flow must match the direction indicated by the arrow on the body
- The actuator must be suspended downwards.

Further details can be found in ▶ EB 2546-1 and ▶ EB 2546-2.

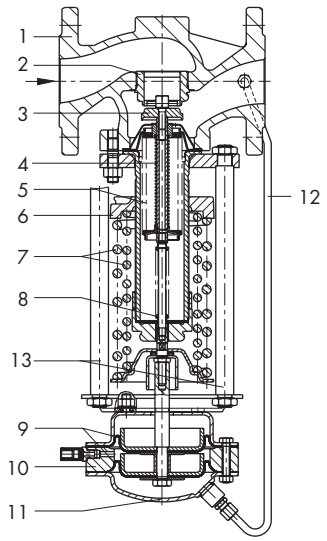

Type 36-3 Pressure Reducing Valve

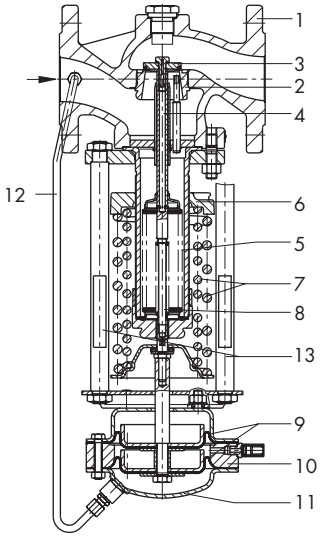

Type 36-8 Excess Pressure Valve

Pillars with the actuator are turned into the plane of projection in both diagrams.

1 Valve body
2 Seat (exchangeable)
3 Plug (balanced)
4 Plug stem
5 Balancing bellows
6 Set point adjuster
7 Set point springs
8 Bellows seal
9 Two diaphragms
10 Intermediate ring with diaphragm rupture indicator
11 Actuator housing
12 Control line
13 Stud bolt

Fig. 3: *Functional diagrams*

Table 1: *Technical data · All pressures in bar (gauge)*

Nominal size DN		15	20	25	32	40	50	65	80	100
K_{VS} coefficient		4	6.3	8.0	16	20	32	50	80	125
x_{FZ} value		0.60	0.60	0.55	0.55	0.50	0.45	0.40	0.35	0.35
Nominal pressure PN		16, 25 or 40								
Max. perm. differential pressure Δp		25 bar						20 bar		16 bar
Overloading		12 bar (on one side)								
Max. permissible temperature		150 °C								
Leakage class acc. to IEC 60534-4		≤ 0.05 % of K_{VS} coefficient								
Set point ranges	Type 36-3	2.0 to 4.2 · 2.4 to 6.3 · 6.0 to 10.5								
	Type 36-8	2.0 to 4.4 · 2.4 to 6.6 · 6 to 11								
Compliance		CE · EAC								

Table 2: *Materials · Material numbers according to DIN EN*

Valve			
Nominal pressure	PN 16	PN 25	PN 40
Body	Cast iron EN-JL1040	Spheroidal graphite iron EN-JS1049	Cast steel 1.0619
Seat	Stainless steel		
Plug with PTFE soft seal	Stainless steel		
Balancing bellows and bellows seal	Stainless steel		
Actuator			
Diaphragm cases	Sheet steel S235JR (St 37-2)		
Diaphragm	EPDM [1] with fabric reinforcement		

[1] Special version, e.g. for mineral oils or air: FPM (FKM)

Dimensions

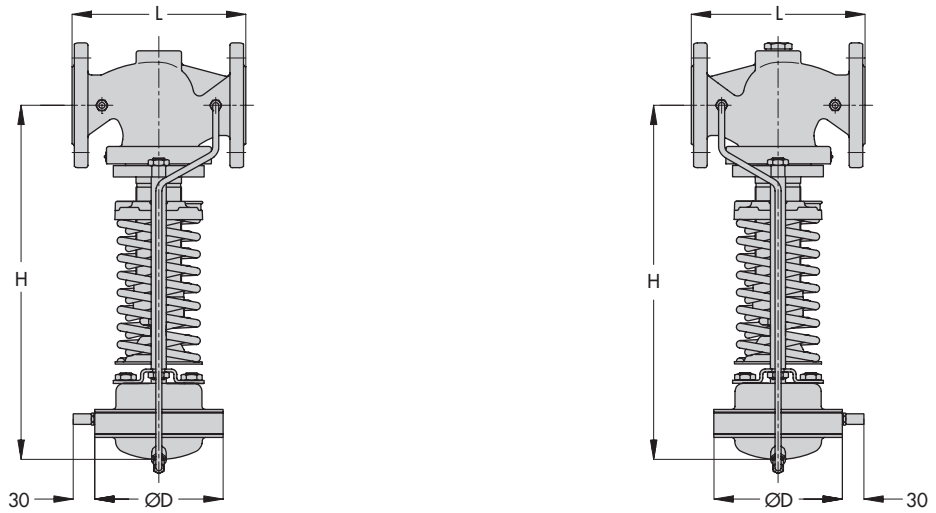

Type 36-3 Pressure Reducing Valve **Type 36-8 Excess Pressure Valve**

Fig. 4: *Dimensions in mm*

Table 3: *Dimensions in mm and weights*

Nominal size DN	15	20	25	32	40	50	65	80	100
Length L	130	150	160	180	200	230	290	310	350
Height H	415			470			600		615
Diaphragm housing ØD	170								
Weight for PN 16 [1] (approx. kg)	13	14	14.5	20	22	25.5	41.5	48.5	57.5

[1] +10 % for spheroidal graphite iron EN-JS1049 (PN 25) and cast steel 1.0619 (PN 40)

Specifications subject to change without notice

SAMSON AG · MESS- UND REGELTECHNIK
Weismüllerstraße 3 · 60314 Frankfurt am Main, Germany
Phone: +49 69 4009-0 · Fax: +49 69 4009-1507
samson@samson.de · www.samson.de

T 2546 EN

2015-10-19 · English