Series 44 Self-operated Pressure Regulators

Type 44-2 Pressure Reducing Valve
Type 44-3 Safety Shut-off Valve (SSV) with pressure reducing valve

Typetested for water **by TÜV**

Application

Pressure regulators for set points from **1** to **10.5 bar** · Valves in **DN 15** to **50** · **PN 25** · Suitable for liquids, air, and nitrogen up to **150 °C** · Pressure reducing valve and safety shut-off valve (**SSV**) for protecting district heating plants

The valve **closes** when the downstream pressure rises

Typetested by TÜV CE

The **Type 44-2** Pressure Reducing Valve consists of a valve and an actuator with operating diaphragm.

The **Type 44-3 Safety Shut-off Valve** (**SSV**) with pressure reducing valve is equipped with an actuator with two diaphragms. The version with two independent operating diaphragm complies with AGFW (German District Heating Association) regulations concerning components in house substations according to DIN 4747-1. This regulator version continues to operate even after the operating diaphragm ruptures.

In the event of a ruptured operating diaphragm in the actuator, the regulator continues to operate. An indicator at the actuator shows that the actuator is damaged.

Special features

- Suitable for air, nitrogen, water, and other liquids, provided these do not cause the materials used to corrode.
- Single-seated valve with balanced plug

Versions (see Fig. 2 and Fig. 3)

Series 44 Pressure Regulators with actuators for set point ranges from 1 to 10.5 bar · Valves in nominal sizes DN 15 to 50 · With welding ends (special version with threaded ends) DN 32, 40, and 50 versions also available with flanged valve body

Type 44-2 Pressure Reducing Valve with one operating diaphragm

Type 44-3 Safety Shut-off Valve (SSV) with pressure reducing valve and two operating diaphragms. In the event of a ruptured operating diaphragm in the actuator, the regulator continues to operate.

Special version

– Restricted flow cross-section with lower K_{VS} coefficient for DN 15, 20, and 25.
– With internal parts made of FPM (FKM), e.g. for use with mineral oils.
– ANSI version on request

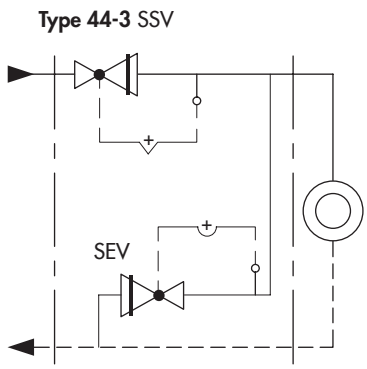

Fig. 1: *Protection of a house substation with a Type 44-3 SSV and SEV*

Fig. 2: *Type 44-3 SSV, version with welding ends*

Principle of operation

The medium flows through the valve (1) as indicated by the arrow. The position of the plug determines the flow rate across the area released between plug (3) and seat (2).

The downstream pressure p_2 to be controlled is transmitted over the external control line (11) to the operating diaphragm (6.1) where it is converted into a positioning force. This force moves the valve plug depending on the force of spring assembly (8) which can be adjusted at the set point adjuster (10).

The valve closes when the downstream pressure rises and opens again when this pressure drops.

The valve has a balanced plug (3). As a result, the forces generated by the upstream pressure which act on the valve plug are eliminated.

In the event that the operating diaphragm (6.1) ruptures, the Type 44-3 Safety Shut-off Valve (SSV) continues to function since the backup diaphragm (6.2) takes over the control task.

To recognize a ruptured diaphragm, a diaphragm rupture indicator (12) is installed in the intermediate ring or optionally, a pressure switch can be used to issue a signal, e.g., to a control room.

Type test

The **Type 44-3** Safety Shut-off Valve (SSV) for K_{VS} 2.5 and higher has been typetested for water by the German Technical Inspectorate (TÜV). The test mark is available on request.

Installation

Install the regulator in horizontal pipelines.

The following points must be observed:

- The direction of flow must match the direction indicated by the arrow on the body
- The actuator must be suspended downwards.

Further details can be found in ▶ EB 2623-1 and ▶ EB 2623-2.

1 Valve body
1.1 Connection nut with seal
2 Seat (exchangeable)
3 Plug (balanced)
4 Plug stem
5 Plug spring
6 Actuator
6.1 Operating diaphragm
6.2 Backup diaphragm
7 Actuator stem
8 Spring assembly
9 Spring plate
10 Set point adjuster
11 Control line
12 Diaphragm rupture indicator

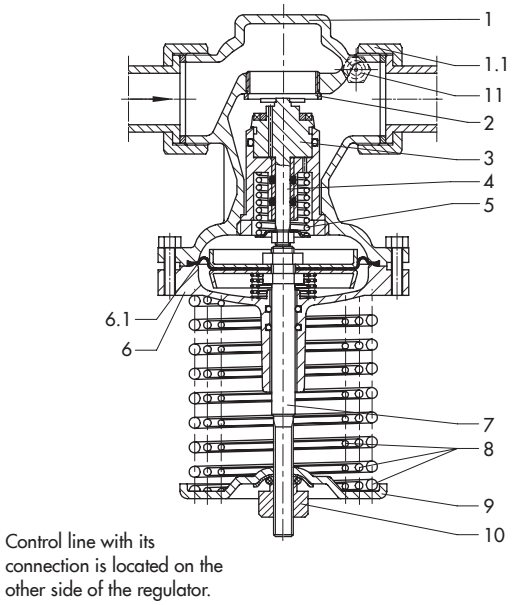

Type 44-2 Pressure Reducing Valve, body with welding ends

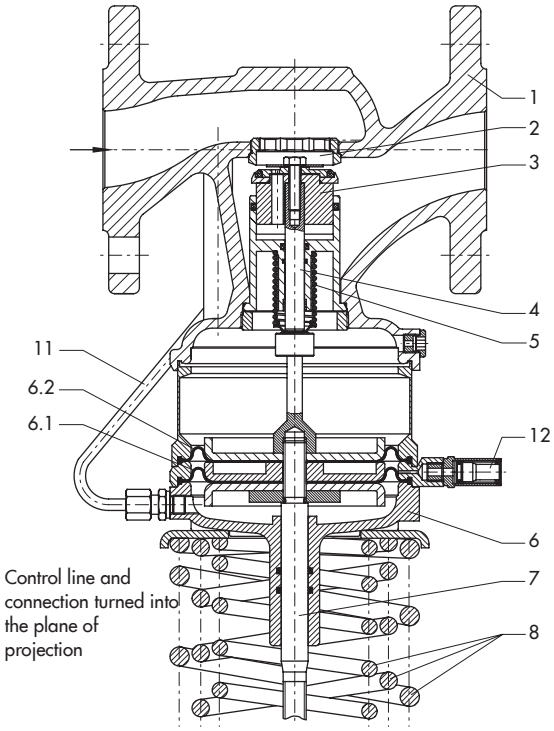

Type 44-3 Safety Shut-off Valve (SSV), flanged valve body

Fig. 3: *Functional diagrams*

Table 1: *Technical data · All pressures in bar (gauge)*

Nominal size DN		15	20	25	32	40	50
K_{VS} coefficient	Standard version	4	6.3	8	12.5	16	20
	Special version	0.4 [3] · 1 · 2.5			–	–	–
	Flanged body	–	–	–	12.5	20	25
x_{FZ} value		0.6		0.55		0.5	0.45
Nominal pressure		PN 25					
Max. perm. differential pressure Δp		20 bar				12 bar	
Max. permissible temperature		150 °C [1]					
Leakage class according to IEC 60534-4 (Type 44-2)		≤ 0.05 % of K_{VS} coefficient					
Set point ranges [2], continuously adjustable							
	Type 44-2	1 to 4 bar · 2 to 4.2 bar · 2.4 to 6.3 bar · 6 to 10.5 bar					
	Type 44-3 (SSV)	1 to 4 bar [3] · 2 to 4.2 bar · 2.4 to 6.3 bar · 6 to 10.5 bar					
Compliance		CE · EAC					

1) Only the version for mineral oils can be used when air or nitrogen are used.
2) Special set point ranges on request.
3) Special version without type test

Table 2: *Materials · Material numbers according to DIN EN*

Type 44-2 and Type 44-3 (SSV) Pressure Regulators	
Valve body	Red brass CC499K · Spheroidal graphite iron EN-JS1049 [1]
Actuator housing/intermediate ring	Red brass CC499K
Seat	Stainless steel 1.4305
Plug [3]	Brass 2.0402 and stainless steel 1.4305 with EPDM soft seal [2]
Valve spring	Stainless steel 1.4310
Operating diaphragm	EPDM with fabric reinforcement [2]
Seals	EPDM [2]

1) Additional version for DN 32, 40, and 50: valve with flanged body made of spheroidal graphite iron
2) Special version, e.g. for mineral oils: FPM (FKM)
3) K_{VS} 0.4: stainless steel 1.4305

Flow rate diagram for water

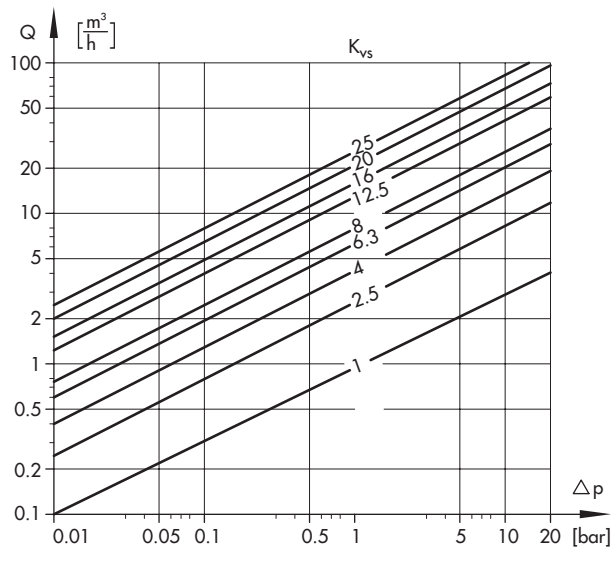

Fig. 4: *Flow rate diagram for water*

Dimensional drawings

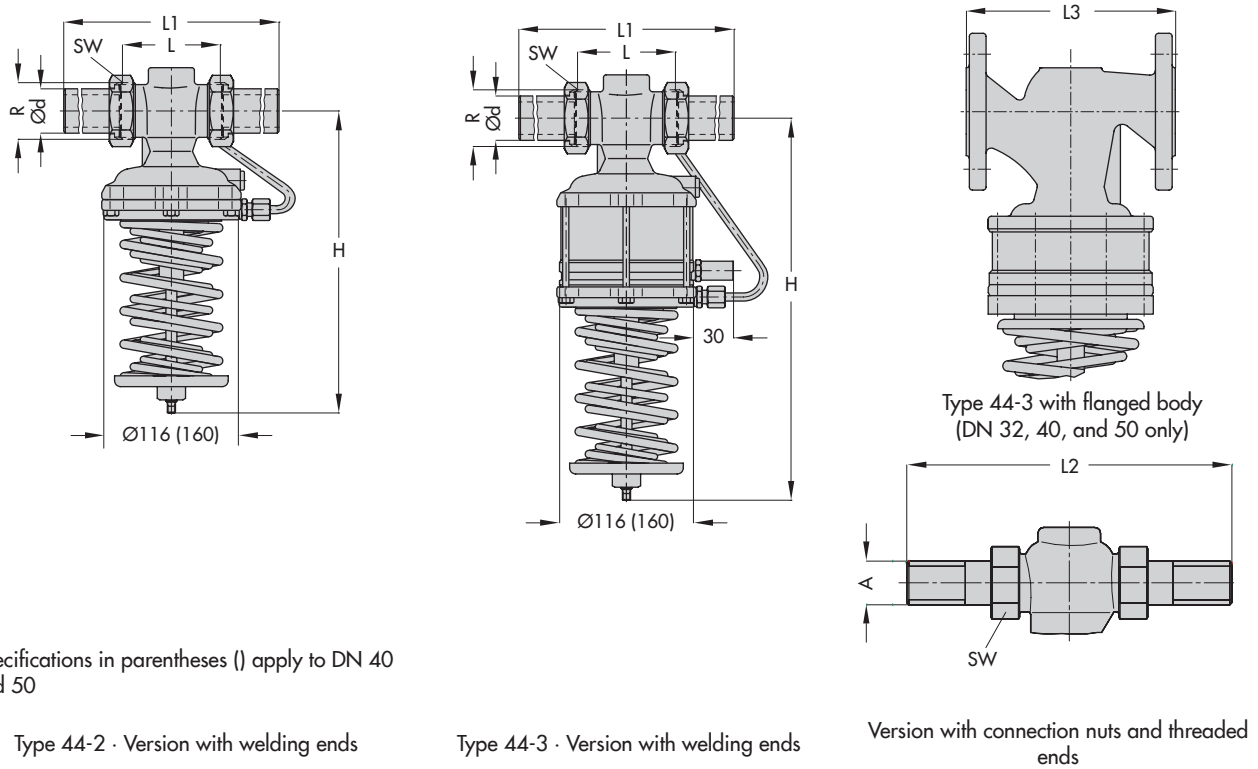

Specifications in parentheses () apply to DN 40 and 50

Type 44-2 · Version with welding ends

Type 44-3 · Version with welding ends

Version with connection nuts and threaded ends

Fig. 5: *Dimensions*

Table 3: *Dimensions in mm and weights*

Valve size	**DN**	**15**	**20**	**25**	**32**	**40**	**50**
Pipe Ød		21.3	26.8	33.7	42.4	48.3	60.3
Connection R		G ¾	G 1	G 1¼	G 1¾	G 2	G 2½
Width across flats SW		30	36	46	59	65	82
L		65	70	75	100	110	130
L1 with welding ends		210	234	244	268	294	330
H	Type 44-2	230			250	380	
	Type 44-3	285 [1]			443		
Weight, approx. kg		2.0	2.1	2.2	8.5	9.0	9.5
With **flanged body** (DN 32, 40, and 50)							
L3		–			180	200	230
Weight, approx. kg					11.7	13	14.5
Special version							
With **threaded ends** (male thread)							
L2		129	144	159	192	206	228
Male thread A		G ½	G ¾	G 1	G 1¼	G 1½	G 2
Weight, approx. kg		2.0	2.1	2.2	8.5	9.0	9.5

[1] Set point range 6 to 10.5 bar: 310 mm

Ordering text

Type 44-2 Pressure Reducing Valve

Type 44-3 Safety Shut-off Valve (SSV) with pressure reducing valve

DN … with welding ends, threaded ends or with flanged body (DN 32, 40, and 50 only)

Set point range … bar

Optionally, special version …

Specifications subject to change without notice

SAMSON AG · MESS- UND REGELTECHNIK
Weismüllerstraße 3 · 60314 Frankfurt am Main, Germany
Phone: +49 69 4009-0 · Fax: +49 69 4009-1507
samson@samson.de · www.samson.de