Series 42 Self-operated Pressure Regulators
Differential Pressure Regulators with Type 2424/Type 2428 Actuator (closing) and balanced Type 2422 Valve

Type 42-24 · Type 42-28

ANSI version

Application

Differential pressure set points **Δp** from **0.75** to **145 psi** (0.05 to 10 bar) · Valves **NPS ½** to **10**[1] (DN 15 to 250) · Pressure rating **Class 125** to **300** · Suitable for **liquids** and **vapors**[2] from **40** to **660 °F** (5 to 350 °C), for **air** and **non-flammable gases** up to **175 °F** (80 °C)

The valve **closes** when the differential pressure **rises**.

Differential pressure regulators for district heating systems, extended heating systems and industrial applications

The regulators control the differential pressure according to the adjusted set point.

Special features

- Low-noise, medium-controlled proportional regulator requiring little maintenance
- **Type 42-24**: Set point adjustable in wide range
  Type 42-28: Fixed set point
- Single-seated valve with a plug balanced by a stainless steel bellows or a diaphragm NPS 2½ to 10 (DN 65 to 250).
- Suitable for circuit water, water/glycol mixtures, steam and air as well as other liquids, gases and vapors, provided these do not affect the characteristics of the operating diaphragm
- Valve body optionally made of cast iron A126B, cast steel A216 WCC or cast stainless steel A351 CF8M
- Particularly suitable for district heating supply networks

Versions

Differential pressure regulators for installation in the flow pipe and return flow pipe (see Application) · Flanged connections

Type 42-24 (Fig. 1) · Type 2422 Valve · Balanced by a bellows NPS ½ to 10 (DN 15 to 250) · Balanced by a diaphragm NPS 2½ to 10 (DN 65 to 250) · Type 2424 Actuator · Adjustable set point

Type 42-28 (Fig. 2) · Type 2422 Valve · Balanced by a bellows NPS ½ to 4 (DN 15 to 100) · Balanced by a diaphragm NPS 2½ to 4 (DN 65 to 100) · Type 2428 Actuator · Fixed set point, adjusted to Δp = 3, 4, 6 or 7 psi (0.2, 0.3, 0.4 or 0.5 bar)

Accessories

Required accessories, such as compression-type fittings, needle valves, equalizing tanks and control lines, are listed in Data Sheet ▶ T 3095.

1) Valves larger than NPS 10 (DN 250) on request
2) Version balanced by a bellows only

Fig. 1: *Type 42-24 Differential Pressure Regulator (adjustable set point)*

Fig. 2: *Type 42-28 Differential Pressure Regulator (fixed set point)*

Special versions

Actuator with two diaphragms (Type 42-24) · Version with FPM diaphragm, e.g. for mineral oil · Special reduced C_V (K_{VS}) coefficient · Valve in corrosion-resistant version (min. material grade 1.4301) · Valves larger than NPS 10 (DN 250) · Version for temperatures above 430 °F (220 °C) · Version for deionized water · Version free of non-ferrous metal · Version for small flow rates · Valve with micro trim with C_V 0.0012 to 0.05 (K_{VS} 0.001 to 0.04) or C_V 0.12, 0.5 and 1.2 (K_{VS} 0.1, 0.4 and 1) without pressure balancing · NPT thread connections for NPS ½ to 2 (Class 250)

Principle of operation (see Fig. 3)

The medium flows through the valve in the direction indicated by the arrow. The position of the valve plug (3) determines the differential pressure over the cross-sectional area released between the plug (3) and seat (2).

The Type 2422 Valve is balanced. The forces acting on the valve plug created by the upstream and downstream pressures are balanced by a balancing bellows (5) or balancing diaphragm (5.1).

In valves balanced by a bellows, the upstream pressure p_1 acts on the outside of the metal bellows (5), while the downstream pressure p_2 acts on the inside of the bellows.

In a valve balanced by a diaphragm, the downstream pressure p_2 acts on the inside and the upstream pressure p_1 on the outside of the balancing diaphragm (5.1). In both cases, the forces created by the upstream and downstream pressures acting on the valve plug are balanced out.

The differential pressure to be controlled is transferred to the operating diaphragm (13) where it is transformed into a positioning force. This force is used to move the plug (3) according to the force of the set point springs (16).

In Type 42-24, the set point can be adjusted at the set point adjuster (17).

In Type 42-28, the set point springs (16) in the actuator determines the set point.

All versions have control lines (20) to transfer the high pressure and low pressure to the actuator.

Type 2424 and Type 2428 Actuators are equipped with an overload protection (21). It prevents a rise in differential pressure during extreme operating conditions (e.g. vacuum at the heat exchanger) by opening an internal excess pressure limiter. As a result, plants and the regulator itself are protected against excessively high differential pressures.

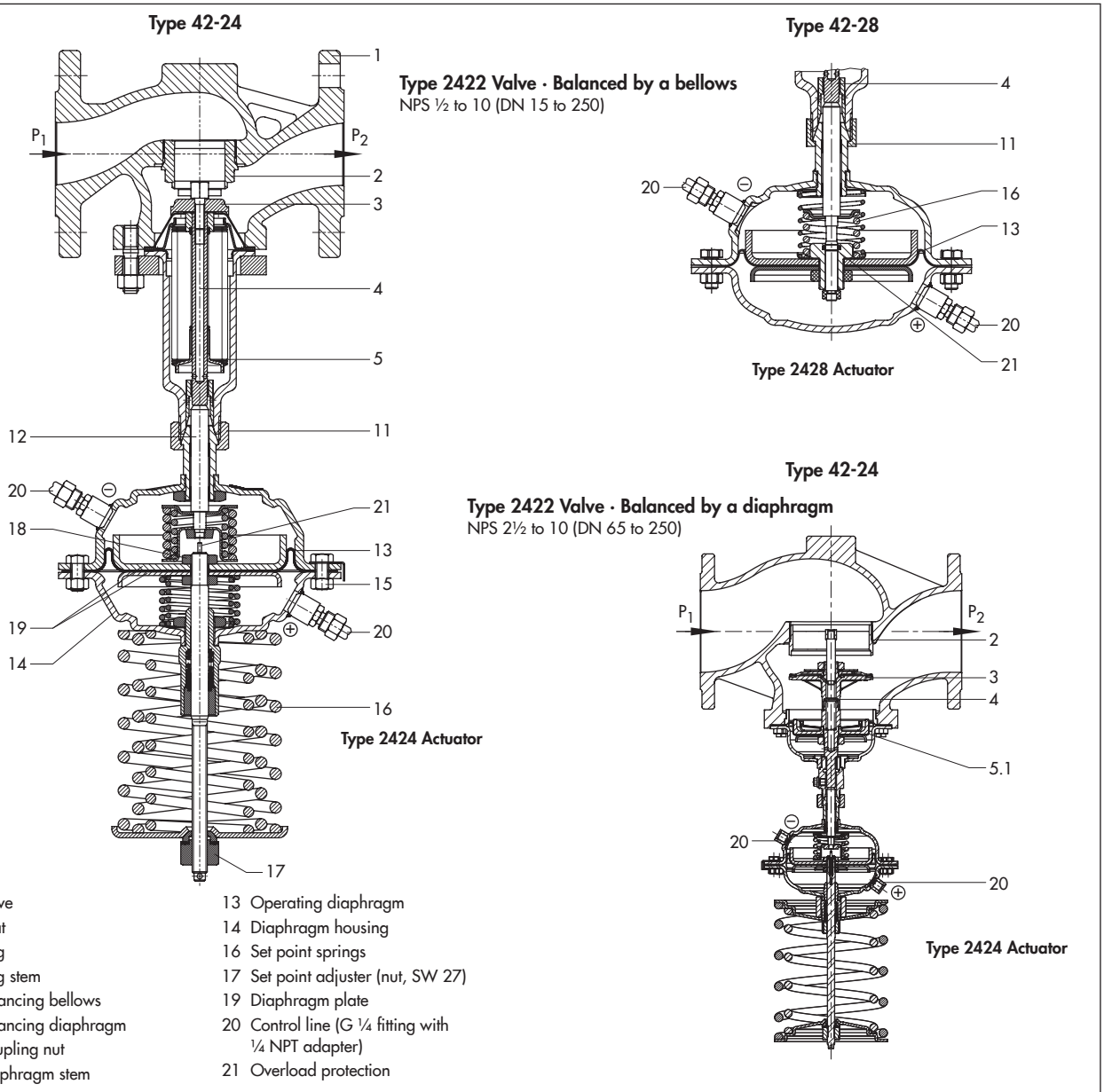

1 Valve
2 Seat
3 Plug
4 Plug stem
5 Balancing bellows
5.1 Balancing diaphragm
11 Coupling nut
12 Diaphragm stem
13 Operating diaphragm
14 Diaphragm housing
16 Set point springs
17 Set point adjuster (nut, SW 27)
19 Diaphragm plate
20 Control line (G ¼ fitting with ¼ NPT adapter)
21 Overload protection

Fig. 3: *Functional diagram*

Type 42-24 Differential Pressure Regulator with two diaphragms

SAMSON offers a special version of Type 42-24 with an actuator with two diaphragms. The actuator with two diaphragms provides increased functional reliability.

The two diaphragms separate both diaphragm chambers connected to the high-pressure and low-pressure connections. They generate a positioning force from the differential pressure. A mechanical diaphragm rupture indicator (22) is located between the two diaphragms, which responds at approx. 22 psi (1.5 bar). In the event of a diaphragm rupture, the pressure in the space between the two operating diaphragm starts to increase. This causes the pin in the diaphragm rupture indicator to be pushed outwards and a red ring appears, indicating the diaphragm rupture. The intact operating diaphragm takes on the control task of the ruptured diaphragm.

A pressure switch can be optionally mounted to the actuator to trigger an alarm.

If a diaphragm rupture is indicated, we recommend replacing both diaphragms.

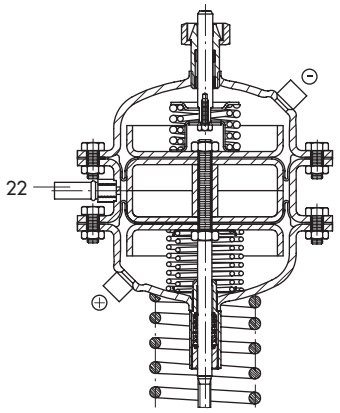

Actuator with two diaphragms

22 Diaphragm rupture indicator

Fig. 5: *Type 42-24 with actuator with two diaphragms*

Installing the valve and mounting the actuator

Valve and actuator are delivered unattached.

A coupling nut is used to attach the actuator to the valve. The actuator is to be mounted preferably after the valve is installed in the pipeline.

The following points must be observed:

- Installation of the valve in horizontal pipelines
- The direction of flow must match the direction indicated by the arrow on the body
- Install a strainer (e.g. SAMSON Type 2 NI) upstream of the valve.

Permissible mounting positions

- Actuator suspended (see photo): standard installation, all versions, above 175 °F (80 °C) and for applications with steam
- Actuator upright (actuator on top of the valve): all versions NPS ½ to 3 (DN 15 to 80) and max. 175 °F (80 °C)
- Actuator sideways: versions with fixed plug guide only

Refer to ▶ EB 3003 for details.

Application

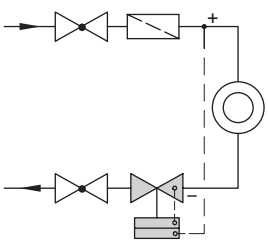

Type 42-24/-28
Installation in return flow pipe

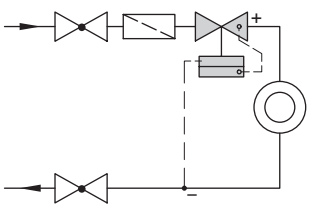

Type 42-24/-28
Installation in flow pipe

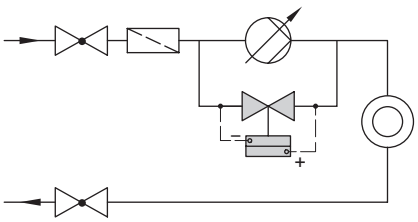

Type 42-24 · Installation in bypass of a pump with variable speed.

The regulator opens as soon as the pressure drop across the centrifugal pump falls below the set point due to the index circuit of the pump. This ensures that the minimum pump delivery rate is kept.

– – – – – Control line to be attached on installing the regulator in the pipeline

Fig. 4: *Sample applications*

Table 1: *Technical data*

Type		42-24				42-28	
Valve size		**NPS ½ to 10 · DN 15 to 250**				**NPS ½ to 4 · DN 15 to 100**	
Pressure rating		Class 125, 150 and 300					
Max. permissible temperature	Valve	See pressure-temperature diagram in ▶ T 3000					
	Actuator[1]	With compensation chamber: Steam and liquids up to 660 °F (350 °C)[2] Without compensation chamber: Liquids up to 300 °F (150 °C) · Air and gases up to 175 °F (80 °C)					
Set point ranges	psi	0.75 to 3.5 · 1.5 to 8.5 · 3 to 14.5 · 7 to 20 14.5 to 35 · 30 to 75 · 65 to 145[3]				3, 4, 6 or 7	
	bar	0.05 to 0.25 · 0.1 to 0.6 · 0.2 to 1 0.5 to 1.5 · 1 to 2.5 · 2 to 5 · 4.5 to 10[3]				0.2 · 0.3 · 0.4 or 0.5	
Actuator area A		12 in² (80 cm²)	25 in² (160 cm²)	50 in² (320 cm²)	100 in² (640 cm²)	25 in² (160 cm²)	50 in² (320 cm²)
Pressure above adjusted set point at which internal excess pressure limiter responds		35 psi (2.4 bar)	17.5 psi (1.2 bar)	9 psi (0.6 bar)	4 psi (0.3 bar)	9 psi (0.6 bar)	4 psi (0.3 bar)
Max. perm. operating pressure for actuator with two diaphragms		580 psi (40 bar)	580 psi (40 bar)	360 psi (25 bar)	360 psi (25 bar)	–	
Leakage class according to ANSI/ FCI 70-2		≤0.05 % of C_V (K_{VS}) coefficient					

1) Higher temperatures on request
2) Steam version only with valves balanced by a bellows
3) NPS 6 to 10 (DN 150 to 250): 65 to 145 psi (4.5 to 10 bar) on request

Terms for control valve sizing according to IEC 60534, Parts 2-1 and 2-2: $F_L = 0.95$, $X_T = 0.75$

Table 2: *Materials · Material numbers according to ASTM and DIN EN*

Valve

Type 2422 Valve, balanced by a bellows				
Valve size		**NPS ½ to 10 · DN 15 to 250**		
Pressure rating		Class 125	Class 150/300	Class 150/300
Valve body		Cast iron A126B	Cast steel A216 WCC	Cast stainless steel A351 CF8M
Valve seat		Stainless steel 1.4104 or 1.4006		1.4404
Plug	Up to NPS 4 (DN 100)	Stainless steel 1.4104, 1.4112 or 1.4006[1]		1.4404
	NPS 6 to 10 (DN 150 to 250)	1.4404, with PTFE soft seal		
Plug stem		1.4301		
Metal bellows		1.4571 · NPS 6 (DN 150) and larger: 1.4404		
Bottom section		P265GH		1.4571
Body gasket		Graphite on metal core		
Type 2422 Valve, balanced by a diaphragm				
Valve size		**NPS 2½ to 4 · DN 65 to 100**		
Pressure rating		Class 125	Class 150	
Valve body		Cast iron A126B	Cast steel A216 WCC	
Valve seat		1.4408		
Plug		CW617N		
Pressure balancing		Diaphragm plate EN-JS1030 · EPDM balancing diaphragm, max. 300 °F (150 °C) or NBR diaphragm, max. 175 °F (80 °C)		
Valve size		**NPS 6 to 10 · DN 150 to 250**		
Pressure rating		Class 125	Class 150/300	Class 150/300
Valve body		Cast iron A126B	Cast steel A216 WCC	Cast stainless steel A351 CF8M
Valve seat		CC499K[2]		
Plug		CC499K[2] · With EPDM soft seal, max. 300 °F (150 °C) or with PTFE soft seal, max. 300 °F (150 °C)		
Pressure balancing		Diaphragm plate EN-JS1030 · EPDM balancing diaphragm, max. 300 °F (150 °C) or NBR diaphragm, max. 175 °F (80 °C)		

1) Optionally with soft seal with standard C_V (K_{VS}) coefficients
2) Special version 1.4409

Actuator

Type 2424/Type 2428 Actuator			
Valve body	Cast iron A126B	Cast steel A216 WCC	Cast stainless steel A351 CF8M
Diaphragm cases	DD 11		1.4301
Diaphragm	EPDM[1] with fabric reinforcement		
Guide bushing	DU bushing		PTFE
Seals	EPDM/PTFE[1]		

1) Special version, e.g. for mineral oils: FPM (FKM)

Table 3: *C_V (K_{VS}) coefficients, x_{FZ} values, and max. permissible differential pressures*

Type 2422 Valve, balanced by a bellows												
Valve size	**NPS**	**½**[1]	**¾**[1]	**1**[1]	**1½**	**2**	**2½**	**3**	**4**	**6**	**8**	**10**
	DN	**15**	**20**	**25**	**40**	**50**	**65**	**80**	**100**	**150**	**200**	**250**
Valve travel		0.4″ (10 mm)					0.6″ (16 mm)			0.9″ (22 mm)		
Standard C_V (K_{VS}) coefficient	C_V	5	7.5	9.4	23	37	60	94	145	330	490	590
	K_{VS}	4	6.3	8	20	32	50	80	125	280	420	500
Max. permissible differential pressure Δp		360 psi (25 bar)					290 psi (20 bar)		230 psi (16 bar)	175 psi (12 bar)	145 psi (10 bar)	
Reduced C_V (K_{VS}) coefficient	C_V	–	–	5	9.4	20	37		60	145	330	
	K_{VS}	–	–	4	8	16	32		50	125	280	
Max. permissible differential pressure Δp		360 psi (25 bar)							290 psi (20 bar)	230 psi (16 bar)	175 psi (12 bar)	
x_{FZ} value		0.65	0.6	0.55	0.45	0.4		0.35			0.3	

1) Special valve version with micro-trim: C_V 0.0012 to 0.05 (K_{VS} 0.001 to 0.04) or C_V 0.12, 0.5 and 1,2 (K_{VS} 0.1, 0.4 and 1) without pressure balancing

Type 2422 Valve, balanced by a diaphragm							
Valve size	**NPS**	**2½**	**3**	**4**	**6**	**8**	**10**
	DN	**65**	**80**	**100**	**150**	**200**	**250**
Valve travel		0.6″ (15 mm)			1.4″ (35 mm)		
C_V (K_{VS}) coefficient	C_V	60	95	150	445	760	930
	K_{VS}	50	80	125	380	650	800
Max. permissible differential pressure Δp		145 psi (10 bar)			175 psi (12 bar)	145 psi (10 bar)	
x_{FZ} value		0.4	0.35			0.3	

Dimensional drawing · Type 42-24 and Type 42-28 balanced by a bellows · See Table 4

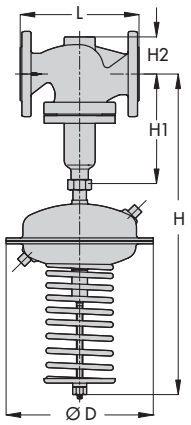

Type 42-24 · Type 2422 Valve balanced by a bellows with Type 2424 Actuator

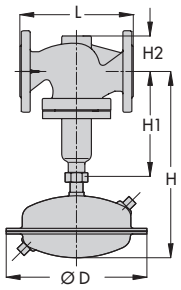

Type 42-28 · Type 2422 Valve balanced by a bellows with Type 2428 Actuator

Type 2422 Valve, balanced by a bellows

Fig. 6: *Dimensions · Valve balanced by a bellows*

Dimensional drawing of actuator with two diaphragms

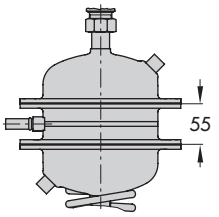

Type 42-24 with two diaphragms (special version). Add approx. 2.2" (55 mm) to the total height H.

Fig. 7: *Dimensions · Actuator with two diaphragms*

Table 4: *Dimensions and weights for Type 42-24 and Type 42-28 · Balanced by a bellows*

Valve size		NPS	½	¾	1	1½	2	2½	3	4	6	8	10
		DN	**15**	**20**	**25**	**40**	**50**	**65**	**80**	**100**	**150**	**200**	**250**
Length L	Class 125/150	inch	7.25			8.75	10	10.9	11.75	13.9	17.75	21.4	26.5
		mm	184			222	254	276	298	352	451	543	673
	Class 300	inch	7.5	7.6	7.75	9.25	10.5	11.5	12.5	14.5	18.6	22.4	27.9
		mm	191	194	197	235	267	292	318	368	473	568	708
Height H1		inch	8.9					11.8		14	23.2	28.7	
		mm	225					300		355	590	730	
Height H2		inch	2.2			2.8		3.9		4.7	6.9	9.3	10.2
		mm	55			72		100		120	175	235	260
Type 42-28 Differential Pressure Regulator													
Set points	**Type 2428 Actuator**												
3, 4, 6, 7 psi (0.2, 0.3, 0.4, 0.5 bar)	Height H		15.4″ (390 mm)					18.3″ (465 mm)		20.5″ (520 mm)			
	Actuator		ØD = 8.9″ (225 mm) · A = 25 in² (160 cm²)[2]					ØD = 11.2″ (285 mm) · A = 50 in² (320 cm²)					
	Weight[3]	lb	25	27	29	44	50	84	95	126	–		
		kg	11.5	12	13	20	22.5	38	43	57			
Type 42-24 Differential Pressure Regulator													
Set points	**Type 2424 Actuator**												
0.75 to 3.5 psi (0.05 to 0.25 bar)	Height H		24″ (610 mm)					30″ (685 mm)		29.1″ (740 mm)	44″ (1120 mm)	49.6″ (1260 mm)	
	Actuator		ØD = 11.2″ (285 mm) · A = 50 in² (320 cm²)[1]					ØD = 15.4″ (390 mm) · A = 100 in² (640 cm²)					
	Weight[3]	lb	46	47	50	65	71	111	113	143	408	937	1069
		kg	21	21.5	22.5	29.5	32	46	51	65	185	425	485
1.5 to 8.5 psi (0.1 to 0.6 bar)	Height H		24.6″ (625 mm)					30″ (685 mm)		29.1″ (740 mm)	44.1″ (1120 mm)	49.6″ (1260 mm)	
	Actuator		ØD = 8.9″ (225 mm) · A = 25 in² (160 cm²)[2]					ØD = 11.2″ (285 mm) A = 50 in² (320 cm²)			ØD = 15.4″ (390 mm) A = 100 in² (640 cm²)[2]		
	Weight[3]	lb	35.3	36.3	38.5	54	60	111	113	143	408	937	1069
		kg	16	16.5	17.5	24.5	27	46	51	65	185	425	485
3 to 14.5 psi (0.2 to 1 bar)	Height H		24″ (610 mm)					30″ (685 mm)		29.1″ (740 mm)	44.1″ (1120 mm)	49.6″ (1260 mm)	
	Actuator		ØD = 8.9″ (225 mm) · A = 25 in² (160 cm²)[2]								ØD = 15.4″ (390 mm) A = 100 in² (640 cm²)		
	Weight[3]	lb	35	36	39	54	60	93	104	135	408	937	1069
		kg	16	16.5	17.5	24.5	27	42	47	61	185	425	485
7 to 20 psi (0.5 to 1.5 bar)	Height H		24″ (610 mm)					30″ (685 mm)		29.1″ (740 mm)	40.9″ (1040 mm)	46.5″ (1180 mm)	
	Actuator		ØD = 8.9″ (225 mm) · A = 25 in² (160 cm²)[2]								ØD = 11.2″ (285 mm) A = 50 in² (320 cm²)		
	Weight[3]	lb	35	36	39	54	60	93	104	135	386	915	1047
		kg	16	16.5	17.5	24.5	27	42	47	61	175	415	475
14.5 to 35 psi (1 to 2.5 bar)	Height H		24″ (610 mm)					30″ (685 mm)		29.1″ (740 mm)	40.9″ (1040 mm)	47.6″ (1210 mm)	
	Actuator		ØD = 8.9″ (225 mm) · A = 25 in² (160 cm²)										
	Weight[3]	lb	35	36	38	54	59	93	104	135	386	915	1047
		kg	16	16.5	17.5	24.5	27	42	47	61	175	415	475
30 to 75 psi (2 to 5 bar), **65 to 145 psi**[4] (4.5 to 10 bar)	Height H		24″ (610 mm)					30″ (685 mm)		29.1″ (740 mm)	40.9″ (1040 mm)	46.5″ (1180 mm)	
	Actuator		ØD = 6.7″ (170 mm) · A = 12 in² (80 cm²)								ØD = 8.9″ (225 mm) A = 25 in² (160 cm²)		
	Weight[3]	lb	35	36	39	54	60	93	104	135	375	904	1036
		kg	16	16.5	17.5	24.5	27	42	47	61	170	410	470

1) Optionally with actuator 100 in² (640 cm²)
2) Optionally with actuator 50 in² (320 cm²)
3) The weight applies to the version with the material specifications A126B. Add +10 % for all other materials.
4) NPS 6 to 10 (DN 150 to 250): 65 to 145 psi (4.5 to 10 bar) on request

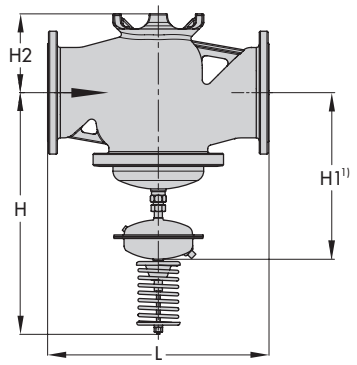

Type 2422 Valve balanced by a diaphragm with Type 2424/2428 Actuator

Type 42-24 with two diaphragms: Add approx. 2.2" (55 mm) to the total height H.

[1)] Type 42-28 only

Fig. 8: *Dimensions · Valve balanced by a diaphragm*

Table 5: *Dimensions and weights for Type 42-24 and Type 42-28 · Balanced by a diaphragm*

Valve size		NPS	2½	3	4	6	8	10
		DN	**65**	**80**	**100**	**150**	**200**	**250**
Length L	Class 125/150	inch	10.9	11.75	13.9	17.75	21.4	26.5
		mm	276	298	352	451	543	673
	Class 300	inch	11.5	12.5	14.5	18.6	22.4	27.9
		mm	292	318	368	473	568	708
Height H2		inch	3.9		4.6	6.9	10.2	
		mm	98		118	175	260	
Type 42-28 Differential Pressure Regulator								
Set points	**Type 2428 Actuator**							
3, 4, 6, 7 psi (0.2, 0.3, 0.4, 0.5 bar)	Height H1		14″ (355 mm)		14.8″ (375 mm)	–		
	Actuator		ØD = 11.2″ (285 mm) · A = 50 in² (320 cm²)			–		
	Weight[3]	lb	84	95	112	–		
		kg	38	43	51			
Type 42-24 Differential Pressure Regulator								
Set points	**Type 2424 Actuator**							
0.75 to 3.5 psi (0.05 to 0.25 bar)	Height H		28.3″ (720 mm)		29.1″ (740 mm)	33.1″ (840 mm)	35.8″ (910 mm)	
	Actuator		ØD = 15.4″ (390 mm) · A = 100 in² (640 cm²)					
	Weight[3]	lb	93	104	121	210	561	595
		kg	42	47	55	95	250	270
1.5 to 8.5 psi (0.1 to 0.6 bar)	Height H		22.6″ (575 mm)		23.4″ (595 mm)	33.1″ (840 mm)	35.8″ (910 mm)	
	Actuator		ØD = 11.2″ (285 mm) · A = 50 in² (320 cm²)[1]			ØD = 15.4″ (390 mm) · A = 100 in² (640 cm²)[2]		
	Weight[3]	lb	93	104	121	210	561	595
		kg	42	47	55	95	250	270
3 to 14.5 psi (0.2 to 1 bar)	Height H		22.6″ (575 mm)		23.4″ (595 mm)	29.9″ (760 mm)	32.7″ (830 mm)	
	Actuator		ØD = 8.9″ (225 mm) · A = 25 in² (160 cm²)[2]			ØD = 11.2″ (285 mm) · A = 50 in² (320 cm²)[1]		
	Weight[3]	lb	93	104	121	210	561	595
		kg	42	47	55	95	250	270
7 to 20 psi (0.5 to 1.5 bar)	Height H		22.6″ (575 mm)		23.4″ (595 mm)	29.9″ (760 mm)	32.7″ (830 mm)	
	Actuator		ØD = 8.9″ (225 mm) · A = 25 in² (160 cm²)[2]			ØD = 11.2″ (285 mm) · A = 50 in² (320 cm²)[1]		
	Weight[3]	lb	93	104	121	210	561	595
		kg	42	47	55	95	250	270
14.5 to 35 psi (1 to 2.5 bar)	Height H		22.6″ (575 mm)		23.4″ (595 mm)	29.9″ (760 mm)	32.7″ (830 mm)	
	Actuator		ØD = 8.9″ (225 mm) · A = 25 in² (160 cm²)[2]					
	Weight[3]	lb	93	104	121	210	561	595
		kg	42	47	55	95	250	270
30 to 75 psi (2 to 5 bar)	Height H		22.6″ (575 mm)		23.4″ (595 mm)	29.9″ (760 mm)	32.7″ (830 mm)	
	Actuator		ØD = 8.9″ (225 mm) · A = 25 in² (160 cm²)[2]					
	Weight[3]	lb	93	104	121	210	561	595
		kg	42	47	55	95	250	270

1) Optionally with actuator 100 in² (640 cm²)
2) Optionally with actuator 50 in² (320 cm²)
3) The weight applies to the version with the material specifications A126B. Add +10 % for all other materials.

Ordering text

Type 42-24 and Type 42-28 Differential Pressure Regulator
NPS … (DN ...), valve balanced by a bellows/diaphragm
Class …, body material ...
Set point or set point range … psi (bar)
Optionally, accessories ...
Optionally, special version

Specifications subject to change without notice

SAMSON AG · MESS- UND REGELTECHNIK
Weismüllerstraße 3 · 60314 Frankfurt am Main, Germany
Phone: +49 69 4009-0 · Fax: +49 69 4009-1507
samson@samson.de · www.samson.de

2016-12-01 · English