Series 42 Self-operated Regulators

Type 42-36 Flow Regulator

Application

Flow rate control in district heating systems or large heating networks. · Valves **DN 15** to **250**[1] · Nominal pressure **PN 16** to **40** · Suitable for liquids, gases and vapors from **5** to **150 °C** [1]

The valve **closes** when the flow rate **rises.**

The flow regulator is used to limit the flow rate in the pipeline. The set point for the flow rate is adjusted at the restriction.

Special features

- Low-noise, medium-controlled proportional regulator requiring little maintenance
- Suitable for circuit water, water/glycol mixtures, steam and air as well as other liquids, gases and vapors, provided these do not affect the characteristics of the operating diaphragm.
- Single-seated valve with a plug balanced by a stainless steel bellows or a balancing diaphragm.
- Valve body optionally available in cast iron, spheroidal graphite iron, cast steel, cast stainless steel or forged stainless steel.

Versions

Type 42-36 (Fig. 1) · Regulators for nominal sizes DN 15 to 250 [1] · Type 2423 Valve with integrated restriction for adjusting the flow rate set point · Type 2426 Actuator with high-pressure control line · Flange connections · Balancing bellows made of CrNiMo steel or balancing diaphragm made of EPDM (DN 65 to 250)

The set point ranges for the flow rate based on water listed in Table 2 apply to a differential pressure at the restriction of either 0.2 or 0.5 bar.

Special version

- With internal parts made of FPM (FKM), e.g. for use with mineral oils
- Liquids and vapors up to 220 °C
- ANSI/JIS version

Accessories

Required accessories, such as compression-type fittings, needle valves, equalizing tanks and control lines, are listed in Data Sheet ▶ T 3095.

[1] On request: valves larger than DN 250 for steam and gases · Other temperature ranges

Fig. 1: *Type 42-36 Flow Regulator*

Associated Information Sheet	▶ **T 3000**	**Edition August 2015**	
Associated Data Sheet for accessories	▶ **T 3095**	**Data Sheet**	**T 3015 EN**

Principle of operation

The medium flows through the valve in the direction indicated by the arrow. The flow rate is determined by the free area between the restriction (1.4) adjusted at the set point adjuster (1.1) and the valve plug (3).

In a fully balanced valve, the position of the plug is not affected by pressure changes in the medium.

The principle of operation of the regulator balanced by a bellows or diaphragm only differs concerning the pressure balancing. Valves balanced by a bellows have a balancing bellows (5), whereas the valves balanced by a diaphragm (DN 65 to 250) have a balancing diaphragm (5.1). The pressure directly downstream of the restriction acts on the outside of the metal bellows or balancing diaphragm. In both cases, the forces created by the upstream and downstream pressures that act on the valve plug are balanced out.

The differential pressure created at the restriction $\Delta p_{restriction}$ operates the actuator. The pressure upstream of the restriction is transmitted through the control line (18) to the lower diaphragm chamber. The pressure downstream of the restriction passes through the hollow plug stem (7) to the diaphragm stem (6) and into the top diaphragm chamber.

If the flow rate increases, the differential pressure ($\Delta p_{restriction}$) increases at the restriction and also at the operating diaphragm (12). This additional force causes the set point springs (14) to be pressed together until the forces are balanced out again. The plug starts to close. The cross-section of flow is reduced and the flow rate drops until it reaches the adjusted set point.

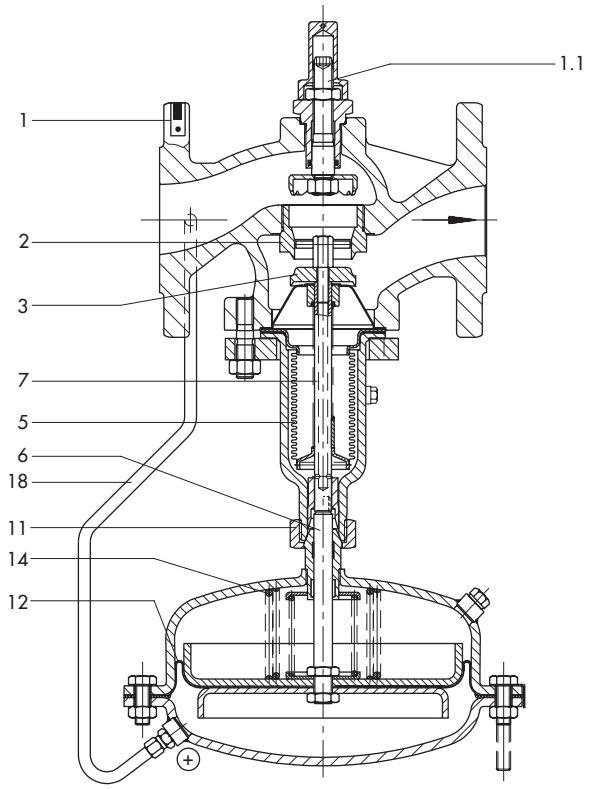

Type 42-36 balanced by a bellows

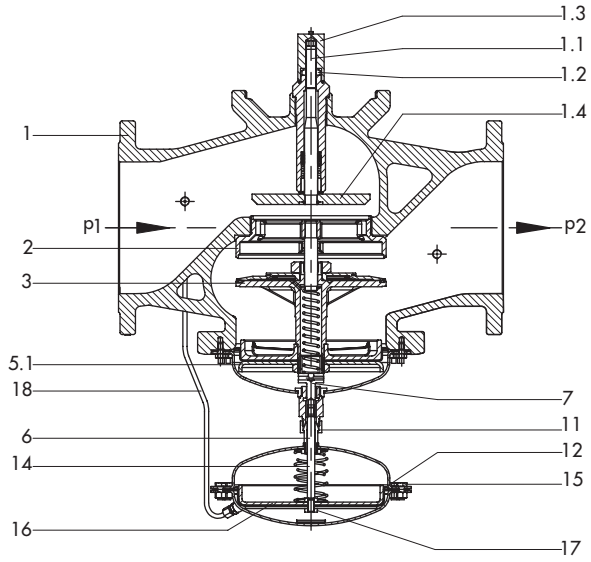

Type 42-36 balanced by a diaphragm

1	Type 2423 Valve (balanced by a bellows)	5.1	Balancing diaphragm
1.1	Flow rate set point adjuster	6	Diaphragm stem
1.2	Lock nut	7	Plug stem
1.3	Cap	11	Coupling nut
1.4	Restriction	14	Set point springs
2	Seat	18	Control line
3	Plug		
5	Balancing bellows		

Fig. 2: *Type 42-36 · Type 2423 Valve balanced by a bellows or diaphragm*

Table 1: *Technical data*

Type 2423 Valve balanced by a bellows

Nominal size		**DN 15 to 250**
Nominal pressure		PN 16, 25 or 40
Max. permissible temperature	Valve body	See pressure-temperature diagram in ▶ T 3000
	Actuator	With condensation chamber: steam and liquids up to 220 °C · Without condensation chamber: liquids up to 150 °C, air and nitrogen up to 150 °C [1]
Set point (differential pressure at restriction)		0.2 bar · 0.5 bar
Leakage class according to IEC 60534-4		≤ 0.05 % of K_{VS} coefficient
Compliance		CE · EAC
Refer to Dimensions for the assignment of actuator and valve		

Type 2423 Valve balanced by a diaphragm

Nominal size		**DN 65 to 250**
Nominal pressure		PN 16, 25 or 40
Max. permissible temperature	Valve body	See pressure-temperature diagram in ▶ T 3000
	Actuator	Water 150 °C · Air and gases 80 °C
Set point (differential pressure at restriction)		0.2 bar · 0.5 bar
Leakage class according to IEC 60534-4		≤ 0.05 % of K_{VS} coefficient
Compliance		CE · EAC
Refer to Dimensions for the assignment of actuator and valve		

[1] Special version: valve with FPM (FKM) orifice stem sealing. FPM (FKM) diaphragm in the actuator.

Table 2: *K_{VS} coefficients, x_{FZ} values, flow rate set point ranges for water and max. permissible differential pressures Δp*

Type 2423 Valve balanced by a bellows

Nominal size DN		**15**	**20**	**25**	**32**	**40**	**50**	**65**	**80**	**100**	**125**	**150**	**200**	**250**
Valve travel		10 mm						16 mm			22 mm			
K_{VS} coefficient		4	6.3	8	16	20	32	50	80	125	190	280	420	500
x_{FZ} value		0.65	0.6	0.55		0.45	0.4		0.35				0.3	
Flow rate set point ranges for water in m³/h														
Diff. pressure across restriction $\Delta p_{restriction}$	0.2 bar	0.05 to 2	0.15 to 3	0.25 to 3.5	0.4 to 7	0.6 to 11	0.9 to 16	2 to 28	3.5 to 35 [1]	6.5 to 63	11 to 80	18 to 120	20 to 180	26 to 220
	0.5 bar	0.15 to 3	0.25 to 4.5	0.4 to 5.3	0.6 to 9.5	0.9 to 16	2 to 24	3.5 to 40	6.5 to 55	11 to 90	18 to 120	20 to 180	26 to 260	30 to 300
Max. perm. differential pressure Δp		25 bar						20 bar		16 bar		12 bar	10 bar	

Type 2423 Valve balanced by a diaphragm

Nominal size DN		**65**	**80**	**100**	**125**	**150**	**200**	**250**
K_{VS} coefficient		50	80	125	250	390	650	800
x_{FZ} value		0.4	0.35				0.3	
Flow rate set point ranges for water in m³/h								
Diff. pressure across restriction $\Delta p_{restriction}$	0.2 bar	2 to 28	3.5 to 35 [1]	6.5 to 63	11 to 120	18 to 180	20 to 320	26 to 350
	0.5 bar	3.5 to 40	6.5 to 55	11 to 90	18 to 180	20 to 260	26 to 450	30 to 520
Max. perm. differential pressure Δp		10 bar			12 bar		10 bar	

[1] 7 to 35 m³/h with 160 cm² actuator, 7 to 40 m³/h with 320 cm² actuator

Differential pressure across the valve

The minimum required differential pressure Δp_{min} across the valve is calculated as follows:

$$\Delta p_{min} = \Delta p_{restriction} + \left(\frac{\dot{V}}{K_{VS}}\right)^2$$

Δp_{min} Minimum differential pressure across the valve in bar

$\Delta p_{restriction}$ Differential pressure created at the restriction for measuring the flow rate

$\dot{V}$ Adjusted flow rate in m³/h

K_{VS} Valve flow coefficient in m³/h

Table 3: *Materials · Material numbers according to DIN EN*

Type 2423 Valve · Balanced by a bellows						
Nominal pressure		**PN 16**	**PN 25**	**PN 16, 25 and 40**		
Valve body		Cast iron EN-JL1040	Spheroidal graphite iron EN-JS1049	Cast steel 1.0619	Cast stainless steel 1.4408	Forged stainless steel 1.4571 [1]
Seat		1.4104, 1.4006			1.4404	
Plug	Up to DN 100	1.4104, 1.4006 [2]			1.4404	
	DN 125 to 250	1.4301, 1.4404 with PTFE seal				
Plug stem		1.4301				
Metal bellows		1.4571 · DN 125 and higher: 1.4404				
Bottom section		P265GH			1.4571	
Body gasket		Graphite on metal core				
Type 2423 · Balanced by a diaphragm						
Nominal pressure		**PN 16**	**PN 25**	**PN 16, 25 and 40**		
Valve body		Cast iron EN-JL1040	Spheroidal graphite iron EN-JS1049	Cast steel 1.0619	Cast stainless steel 1.4408	–
Valve seat		Red brass [3] [4]				
Plug (standard version)		Red brass [3] [5] with EPDM soft seal, max. 150 °C or with PTFE soft seal, max. 150 °C				
Pressure balancing		Balancing cases made of sheet steel DD11 · EPDM balancing diaphragm, max. 150 °C or NBR diaphragm, max. 80 °C				
Type 2426 Actuator						
Diaphragm cases		Sheet steel DD11			1.4301	
Diaphragm		EPDM [6] with fabric reinforcement · Special version for mineral oils: FPM (FKM)				
Guide bushing		DU bushing			PTFE	
Seals		EPDM/PTFE [6]				

1) DN 15, 25, 40 and 50 only
2) Optionally with soft seal with standard K_{VS} coefficients
3) Special version 1.4409
4) DN 65 to 100: 1.4006
5) DN 65 to 80: 1.4104, DN 100: 1.4006, with metal seal
6) Special version for mineral oils: FPM (FKM)

Application

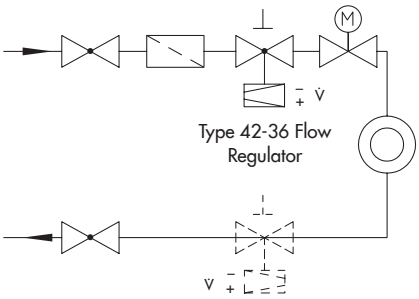

Fig. 3: *Sample application for flow rate control in the flow and return flow pipes with Type 42-36*

Installation of the regulators

Valve, actuator and control lines are delivered unattached.

Mount the actuator preferably after the valve is installed in the pipeline. It is connected to the lower section of the valve with a coupling nut (11).

The following points must be observed:

- Install valves in horizontal pipelines.
- The direction of flow must correspond with the arrow on the valve body.
- Install a strainer (e.g. SAMSON Type 2 NI) upstream of the valve.

Permissible mounting positions

- All nominal sizes: install the actuator suspended downwards (see photo).
- DN 15 to 80 plus max. 120 °C.: install the actuator either suspended or upright.
- All nominal sizes with fixed plug guide plus max. 120 °C: any position possible.
- Steam applications: Always install actuator suspended downwards.

Ordering text

Type 42-36 Flow Regulator
DN ..., valve balanced by a bellows/diaphragm

Body material ..., PN ...

Differential pressure at the restriction 0.2/0.5 bar

Optionally, special version ...

Optionally, accessories ... (▶ T 3095)

Dimension diagram · Type 2423 Valve balanced by a bellows

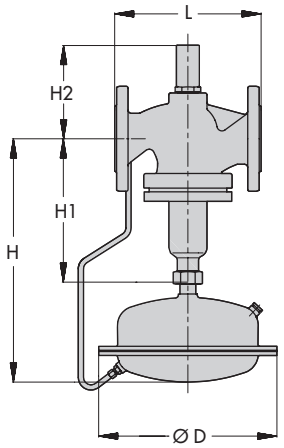

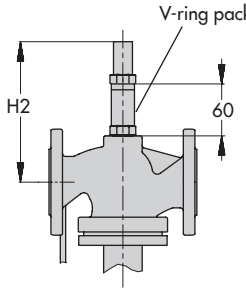

For the version with a V-ring packing (e.g. for steam) in DN 15 to 100, add 60 mm to the dimension for H2 in the table below.

Fig. 4: *Regulator with Type 2423 Valve balanced by a bellows*

Table 4: *Dimensions in mm and weights · Type 2423 Valve* **balanced by a bellows**

Valve size	**DN**	**15**	**20**	**25**	**32**	**40**	**50**	**65**	**80**	**100**	**125**	**150**	**200**	**250**
Length L		130	150	160	180	200	230	290	310	350	400	480	600	730
Height H1		225						300		355	460	590	730	
Height H2 [1]	Other materials	115			150			175	180	200	250	280	400	
	1.4571	113	–	130	–	170	176	–						
Height H		390						465		520	625	765	895	
Actuator		Ø D = 225 mm, A = 160 cm² [2]									Ø D = 285 mm, A = 320 cm² [3]			
Weight for PN 16 [4] (approx.)		12 kg	12.5 kg	13.5 kg	20 kg	20.5 kg	23 kg	39 kg	44 kg	59 kg	121 kg	171 kg	425 kg	485 kg

1) Version with V-ring packing in DN 15 to 100: +60 mm.
2) Optionally with 320 cm² actuator (DN 65 to 100). For regulators with double adapter Do2 (▶ T 3019) for DN 65 to 100, actuator 320 cm² recommended.
3) Optionally with 640 cm² actuator
4) Valve in PN 25/40: +10 %

Dimension diagram · Type 2423 Valve balanced by a diaphragm

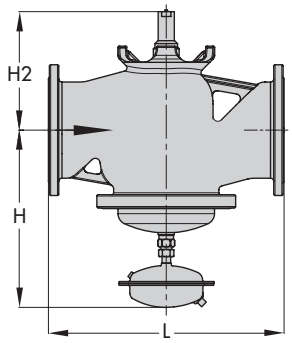

Fig. 5: *Regulator with Type 2423 Valve balanced by a diaphragm*

Table 5: *Dimensions in mm and weights · Type 2423 Valve* **balanced by a diaphragm**

Valve size	**DN 65**	**DN 80**	**DN 100**	**DN 125**	**DN 150**	**DN 200**	**DN 250**
Length L	290	310	350	400	480	600	730
Height H	355		380	910	935	1020	
Height H2	195		220	295	325	345	375
Weight for PN 16 [1] (approx.)							
Type 2423 Valve	34 kg	39 kg	56 kg	65 kg	85 kg	250 kg	270 kg
Type 2426 Actuator	7 kg			20 kg		30 kg	

[1] PN 25/40: +10 %

Specifications subject to change without notice

SAMSON AG · MESS- UND REGELTECHNIK
Weismüllerstraße 3 · 60314 Frankfurt am Main, Germany
Phone: +49 69 4009-0 · Fax: +49 69 4009-1507
samson@samson.de · www.samson.de

2015-08-31 · English