Series 45 Self-operated Regulators
Differential Pressure Regulators with closing actuator
Type 45-1 · Type 45-2 · Installation in the high-pressure line
Type 45-3 · Type 45-4 · Installation in the low-pressure line

Application

Differential pressure set points (Δp) from **0.1 to 10 bar**
Valves in **DN 15** to **50** · Nominal pressure **PN 16** and **25** · Suitable for liquids up to **150 °C** as well as nitrogen and air up to **150 °C** [1)]

The valve **closes** when the differential pressure rises.

Differential pressure regulators for district heating systems, extended piping systems and industrial applications

The regulators mainly consist of a globe valve and an actuator. They regulate the differential pressure to the adjusted set point.

Special features

- Low-maintenance proportional regulators requiring no auxiliary energy
- Only one control line needs to be installed on mounting the regulator since each regulator has its own permanent connection to the actuator
- Suitable for water and other liquids or gases, provided these do not cause the materials used to corrode
- Single-seated valve with balanced plug
- Particularly suitable for district heating plants according to DIN 4747-1 (AGFW requirements for components of domestic installations)

Versions

Differential pressure regulators with closing actuator · Valves in DN 15 to 50 made of red brass · Welding ends (special versions with threaded ends or screwed-on flanges) · Balanced plug · Nominal sizes DN 32, 40, and 50 also available with flanged valve body made of spheroidal graphite iron

Differential pressure regulators for installation in the high-pressure line, e.g. flow pipe

Type 45-1 · Fixed set point of 0.1, 0,2, 0.3, 0.4 or 0.5 bar
Type 45-2 · Set point adjustable between 0.1 and 4 bar · With set point indication (DN 15 to 32 only, set point range between 0.1 and 1 bar or 0.1 and 0.5 bar)

Differential pressure regulators for installation in the low-pressure line, e.g. return flow pipe

Type 45-3 (Fig. 1) · Fixed set point of 0.1, 0,2, 0.3, 0.4 or 0.5 bar · With internal overload protection (excess pressure limiter) in the actuator
Type 45-4 (Fig. 2) · Set point adjustable between 0.1 and 4 bar · With set point indication (DN 15 to 32 only, set point range between 0.1 and 1 bar or 0.1 and 0.5 bar) · With internal overload protection (excess pressure limiter) in the actuator

1) Diaphragm and seals made of FPM (FKM) · PN 25 version only

Fig. 1: *Type 45-3 Differential Pressure Regulator*

Fig. 2: *Type 45-4 Differential Pressure Regulator*

Special version

- Special K_{VS} coefficients for DN 15
- Internal parts made of FPM (FKM), e.g. for use with mineral oils (PN 25 only), other oils on request
- **Combinations** with other devices from SAMSON on request
- ANSI versions available on request

Principle of operation (Fig. 3)

The medium flows through the valve (1) as indicated by the arrow. The position of the valve plug (3) determines the differential pressure Δp over the cross-sectional area released between the plug and seat (2).

The differential pressure to be controlled is transferred to the operating diaphragm (7) where it is transformed into a positioning force.

The valves have a balanced plug to eliminate the forces at the valve plug caused by the differential pressure.

In **Types 45-1 and 45-2**, the pressure in the valve outlet (high pressure) acts on the high-pressure chamber of the operating diaphragm (7) over the attached control line (11). The low pressure (return flow pipe) is transferred to the other side of the operating diaphragm over the external control line (11.1). The regulators are designed for installation in high-pressure lines.

In **Types 45-3 and 45-4**, the pressure in the valve inlet (low pressure) acts on the low-pressure chamber of the operating diaphragm (7) through a hole (12) in the valve body (1). The high pressure (flow pipe) is transferred to the bottom diaphragm chamber over the external control line (11.1). The regulators are designed for installation in low-pressure lines.

The set point springs (5) installed in the valves of **Type 45-1 and Type 45-3** determine the set point. The set point of Type 45-2 and Type 45-4 is adjustable and can be lead-sealed at the set point adjuster (10). The resulting positioning force in all regulators moves the valve plug depending on the fixed or adjustable set point.

Type 45-3 and Type 45-4 feature an overload protection (excess pressure limiter) (13) in the actuator to protect the seat and plug from overload during exceptional operating conditions that could lead to valve or plant damage.

Regulator for installation in the high-pressure line

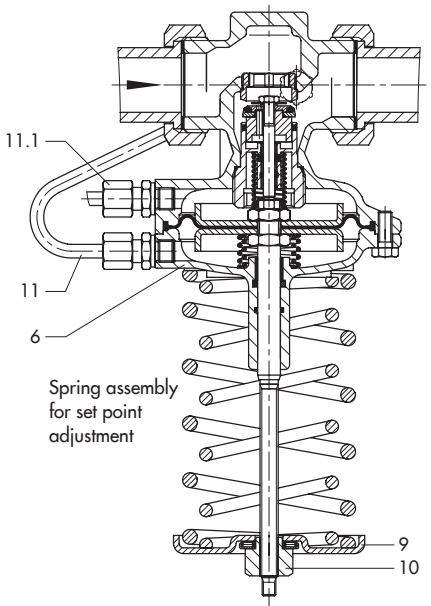

1 Valve body
1.1 Connection nut with seal
1.2 Flanged body
2 Seat (exchangeable)
3 Plug (piston plug), balanced
4 Plug stem
5 Set point springs (fixed set point)
6 Actuator
7 Operating diaphragm
8 Set point spring (adjustable set point)
9 Spring plate
10 Set point adjuster
11 Control line for Type 45-1 and Type 45-2
11.1 External control line
12 Hole (Type 45-3 and Type 45-4 only)
13 Internal excess pressure limiter (overload protection) for Types 45-3 and 45-4

Regulator for installation in the low-pressure line

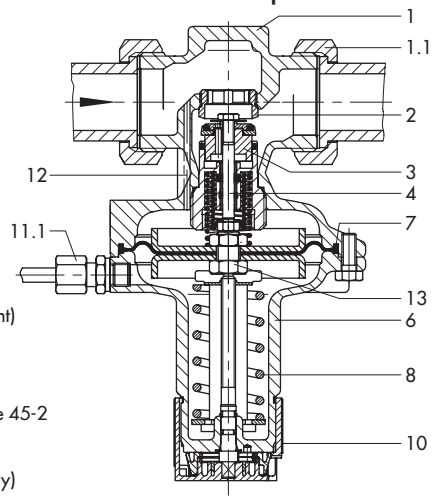

Type 45-2 · Standard version (0.5 to 2 bar/1.0 to 4.0 bar)

Type 45-4 · Standard version (DN 15 to 32/0.1 to 0.5 bar and 0.1 to 1 bar) with set point indication and set point adjuster

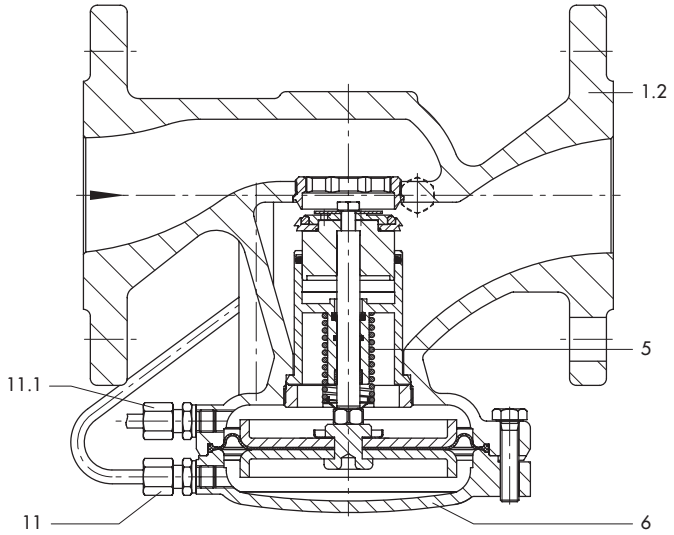

Type 45-1 · Version with flanged body (DN 32, 40, and 50)

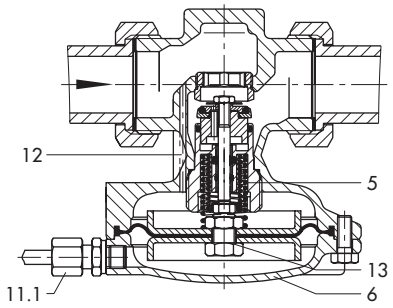

Type 45-3 · Standard version

Fig. 3: *Functional diagrams of the differential pressure regulators*

Table 1: *Technical data · All pressures in bar (gauge)*

Nominal size		DN 15	DN 20	DN 25	DN 32 [1]	DN 40 [1]	DN 50 [1]
K_{VS} coefficient	Standard	2.5	6.3	8	12.5	16	20
	Special version	0.4 · 1.0 · 4.0	–				
	Flanged body	–			12.5	20	25
x_{FZ} value	Standard	0.6		0.55			0.45
	Flanged body	–			0.45		0.4
Nominal pressure	Types 45-2 and 45-4	PN 25					
	Types 45-1 and 45-3	PN 25 and 16			PN 25		
Max. permissible differential pressure Δp across the valve		20 bar/10 bar [2]				16 bar	
Max. permissible valve temperature		Liquids: 150 °C/130 °C [2] · Air and nitrogen: 150 °C [3]					
Pressure above adjusted set point at which internal excess pressure limiter responds (Types 45-3 and 45-4)		0.5 bar					
Differential pressure set point ranges							
Types 45-1 and 45-3, fixed set point		0.1 · 0.2 · 0.3 · 0.4 or 0.5 bar					
Types 45-2 and 45-4, continuously adjustable set point		0.1 to 1 bar · 0.1 to 0.5 bar 0.5 to 2 bar · 1 to 4 bar					0.2 to 1 bar
Compliance		CE · EAC					

1) Additional version: Valve with flanged body made of spheroidal graphite iron (EN-JS1049)
2) For PN 16 version
3) Diaphragm and seals made of FPM (FKM) · PN 25 version only

Table 2: *Materials · Material numbers according to DIN EN*

Types 45-1, 45-2, 45-3 and 45-4		
Body		Red brass CC499K (Rg 5) · Spheroidal graphite iron EN-JS1049 [1]
Seat		Stainless steel 1.4305
Plug	PN 25	Brass, resistant to dezincification, with EPDM soft seal [2]
	PN 16	Brass, resistant to dezincification, and plastic with EPDM soft seal
Upper section	PN 25	Red brass CC499K (Rg 5)
	PN 16	DC 01
Valve springs		Stainless steel 1.4310
Operating diaphragm		EPDM with fabric reinforcement [2]
Seals		EPDM [2]

1) Additional version for DN 32, 40 and 50: Valve with flanged body made of spheroidal graphite iron EN-JS1049
2) Special version in PN 25, e.g. for mineral oils: FPM (FKM)

Application

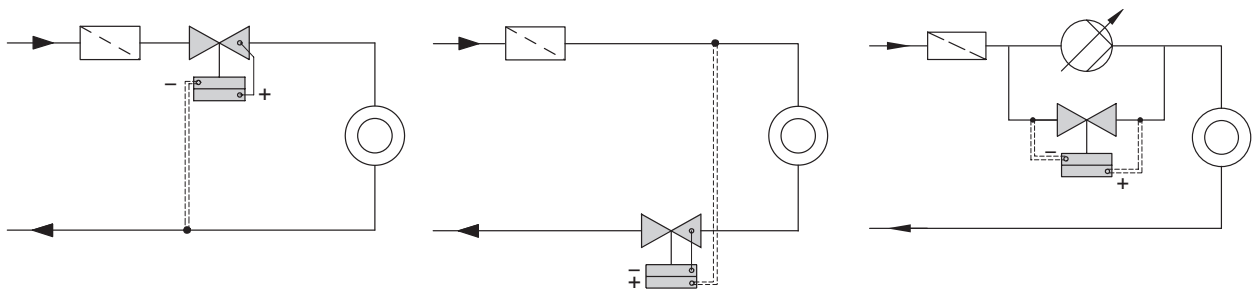

Differential pressure control with Types 45-1 and 45-2, installation in high-pressure line

Differential pressure control with Types 45-3 and 45-4, installation in low-pressure line

Special version with two control lines or two external connections for control lines

= = = To be attached on installing the regulator in the pipeline
——— Permanent connection to actuator

Fig. 4: *Schematic drawings showing typical applications*

Installation

The regulator is suitable for installation in horizontal pipes as well as vertical pipes.

Regulators in DN 32 or larger must only be installed horizontal pipes (with the actuator pointing downwards).

The following points must be observed:

- The medium must flow through the valve in the direction indicated by the arrow on the valve body.
- If possible, install a strainer (e.g. SAMSON Type 1 NI) upstream of the valve.

Further details can be found in ▶ EB 3124.

Ordering text

Type 45-1/45-2/45-3/45-4 Differential Pressure Regulator
DN ..., PN ...
Permissible temperature ... °C, K_{VS} coefficient ....
Connection nuts with welding ends/threaded ends/flanges/ flanged valve body in DN 32, 40 and 50
Set point/set point range ... bar
Optionally, special version ...

Flow rate diagram for water

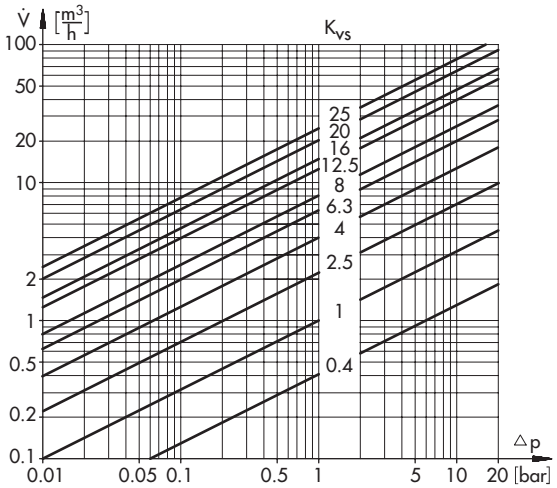

Fig. 5: *Flow rate diagram for water*

Dimensions

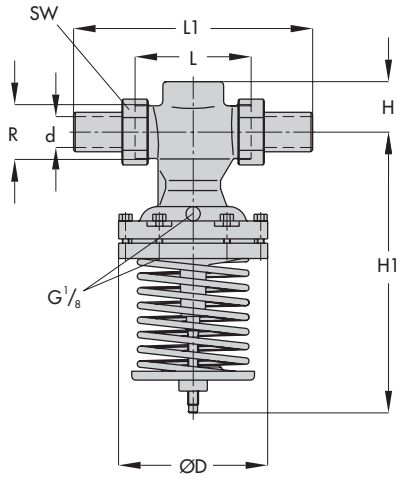

Type 45-2 and Type 45-4 [1], DN 15 to 32
0.5 to 2 bar and 1 to 4 bar
DN 40/50, all set point ranges

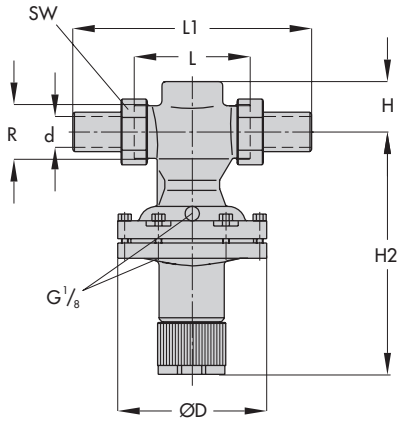

Type 45-2 and Type 45-4 [1], DN 15 to 32
0.1 to 0.5 bar and 0.1 to 1 bar

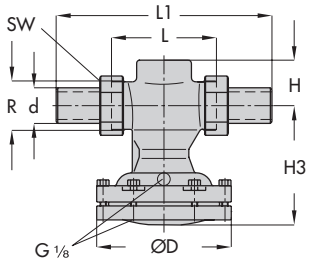

Types 45-1 and 45-3 [1]

[1] Type 45-4 (45-3) same as Type 45-2 (45-1), except G 1/8 connection on diaphragm case

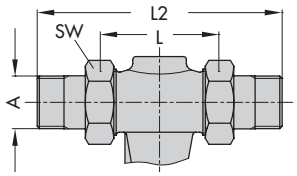

With threaded ends

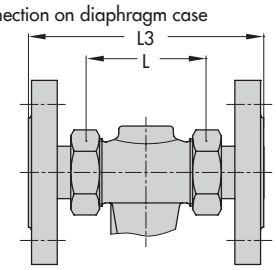

With flanges

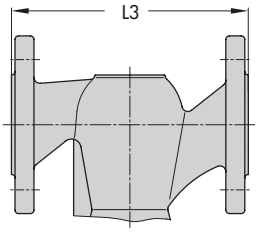

Flanged body (DN 32, 40, and 50)

Dimensions in mm · Standard version

Nominal size DN	15	20	25	32[1]	40[1]	50[1]
Pipe Ø d	21.3	26.9	33.7	42.4	48.3	60.3
Connection R	G ¾	G 1	G 1¼	G 1¾	G 2	G 2½
Width across flats SW	30	36	46	59	65	82
Length L	65	70	75	100	110	130
H	32			45		
H1	230			250	380	
H2	160			180	–	
H3	85			105	140	
ØD	116				160	

[3] Additional version: Valve with flanged body

The dimensions and weights of valves with flanged bodies (DN 32, 40, and 50) are the same as valves with screwed-on flanges.

Dimensions in mm and weights in kg · Incl. connecting parts

Nominal size DN		15	20	25	32	40	50
With welding ends							
Length L1		210	234	244	268	294	330
Weight, approx. kg	45-2/-4	2.0	2.1	2.2	8.5	9	9.5
	45-1/-3	1.5	1.6	1.8	4.8	5.3	6.0
With threaded ends							
Length L2		129	144	159	192	206	228
Male thread A		G ½	G ¾	G 1	G1¼	G1½	G 2
Weight, approx. kg	45-2/-4	2.0	2.1	2.2	8.5	9.0	9.5
	45-1/-3	1.5	1.6	1.8	4.8	5.3	5.8
With flanges [1] [2] or **with flanged body** (DN 32 to 50)							
Length L3		130	150	160	180	200	230
Weight, approx. kg	45-2/-4	3.4	4.1	4.7	11.7	13.0	14.5
	45-1/-3	2.9	3.6	4.3	8	9.3	10.8

[1] PN 16/25
[2] Flanges are already mounted on valves in DN 40 and 50

Fig. 6: *Dimensions*

Specifications subject to change without notice

SAMSON AG · MESS- UND REGELTECHNIK
Weismüllerstraße 3 · 60314 Frankfurt am Main, Germany
Phone: +49 69 4009-0 · Fax: +49 69 4009-1507
samson@samson.de · www.samson.de

2015-12-10 · English