Series 46 Self-operated Regulators
Type 46-5 N Differential Pressure and Flow Limiter

Differential pressure fixed at 0.2, 0.3, 0.5 bar · For installation in the return flow pipe (low-pressure pipe)

Application

Differential pressure and flow limiter for local heat supply and large heating networks · Flow rate set points from **0.1** to **1 m³/h** · Nominal pressure **PN 10** · Nominal size **DN 15** · Suitable for treated water up to **110 °C** and non-flammable gases up to **80 °C**

The valve **closes** when the differential pressure increases. The flow rate is limited.

The Type 46-5 N Regulators are self-operated proportional regulators for heating systems.

They are used to keep differential pressure at the set point of 0.2, 0.3 or 0.5 bar, and to limit the flow rate to a value within a range between 0.2 and 1 m³/h (standard version) or 0.12 and 0.5 m³/h (special version), adjustable at the restriction.

The regulators restrict the flow rate to ensure it does not exceed a certain level. The integrated set point spring determines the differential pressure created at the restriction required to limit the flow rate as well as the differential pressure set point.

Special features

- Low-maintenance proportional regulators requiring no auxiliary energy
- Suitable for water and non-flammable gases
- Especially suitable for local heat supply networks
- Single-seated valve with soft-seated unbalanced plug
- Wide set point range adjustable at the restriction according to a diagram
- Low-noise, reliable, and low-maintenance regulator

Versions

The regulators consist of a valve with adjustable restriction to limit the flow rate and an integrated actuator. The differential pressure set point is fixed.

Differential pressure and flow limiter suitable for installation in the return flow pipe of a local heat supply station · Valve size DN 15 with connecting thread according to ISO 228/1-G ¾ B on both sides for attachment of threaded ends or welding ends · Restriction for adjustment of the flow set point

Closing actuator with integrated low-pressure connection through a hole in the plug and plug stem. High-pressure connection over an external control line.

Accessories

– Threaded ends G ½
– Welding ends

Fig. 1: *Type 46-5 N Differential Pressure and Flow Limiter*

Principle of operation

The medium flows through the valve in the direction indicated by the arrow. The areas released by the restriction (11) and the valve plug (3) determine the flow rate and the differential pressure Δp.

The high pressure of the plant (flow pipe pressure) is transmitted to the high-pressure side (8) of the operating diaphragm (9) over the external control line (7). The pressure directly downstream of the adjustable restriction is transferred to the low-pressure side of the operating diaphragm (9) through a hole in the plug (3) and the plug stem (4). The differential pressure resulting from both pressures is converted into a positioning force. The valve closes when the positioning force is greater than the force of the integrated set point spring (5). In the reverse case, the valve opens.

The integrated set point spring is fixed at a differential pressure of either 0.2, 0.3 or 0.5 bar. Additionally, it determines the differential pressure created at the restriction required to limit flow rate.

The restriction (11) is used to adjust maximum flow rate (flow limitation) by altering the flow cross-section of the valve in such a way that the differential pressure and the differential pressure created at the restriction are equal at the required flow rate.

Pressure conditions in the plant and at the regulator

On selecting the differential pressure set point $\Delta p_{set\ point}$, note that the differential pressure set point results from the known pressure drop across the fully open plant and the differential pressure created at the restriction.

$$\Delta \mathbf{p}_{\mathbf{set\ point}} = \Delta p_{plant} + \Delta p_{restriction}$$

To achieve the maximum flow rate, the differential pressure set point must be at least 0.2 bar higher than that of the plant. If the differential pressure set point is only 0.1 bar higher than the pressure drop across the fully open plant, the maximum flow rate is reduced to 0.7 m³/h.
The minimum required differential pressure Δp_{min} across the valve is calculated as follows:

$$\Delta \mathbf{p}_{\mathbf{min}} = \Delta p_{set\ point} + \left(\frac{\dot{V}}{K_{VS}}\right)^2$$

Δp_{min}	Minimum differential pressure between the flow and return pipes in bar
$\Delta p_{restriction}$	Differential pressure created at the restriction for measuring the flow rate
$\Delta p_{set\ point}$	Differential pressure set point in bar
Δp_{plant}	Differential pressure (pressure loss) when the plant is completely open in bar
$\dot{V}$	Adjusted flow rate in m³/h
K_{VS}	Valve flow coefficient in m³/h

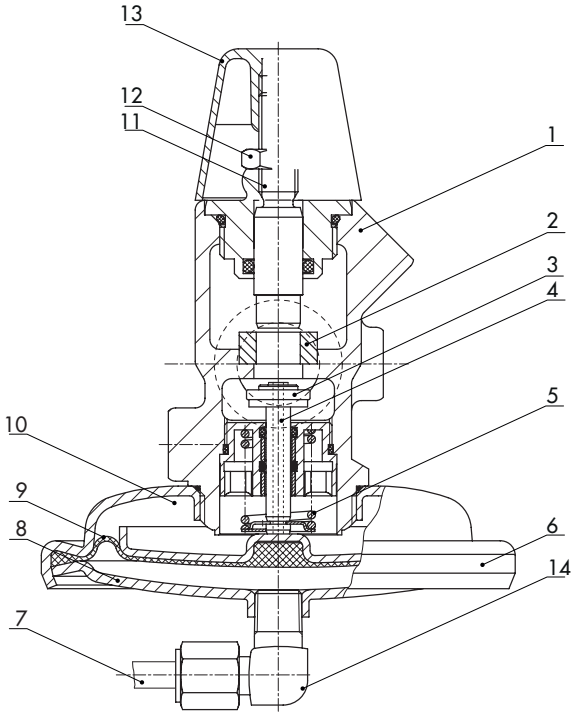

1	Valve body	9	Operating diaphragm
2	Seat	10	Low-pressure side
3	Plug with hole	11	Adjustment of the flow set point (restriction)
4	Plug stem with hole	11.1	Cap for set point adjuster
5	Set point springs	14	Angular screw joint
6	Actuator		
7	Control line for high pressure		
8	High-pressure side		

Fig. 2: *Functional diagram*

Table 1: *Technical data · All pressures (gauge)*

Nominal size	DN 15
Connection	ISO 228/1- G ¾ B
Type of connection	Threaded ends G ½ Welding ends
K_{VS} coefficient Standard Special version	 2.5 1.0
Nominal pressure	PN 10
Max. perm. differential pressure Δp	4 bar
Max. permissible temperature Treated water Non-flammable gases	 110 °C 80 °C
x_{FZ} value	0.43
Flow rate set point range for water with a differential pressure at the restriction of 0.2 bar Standard Special version	 0.2 to 1 m³/h 0.12 to 0.5 m³/h
Differential pressure set point [1], optionally	0.2, 0.3 or 0.5 bar

[1] To achieve the maximum flow rate, the differential pressure set point must be at least 0.2 bar higher than that of the plant.

Table 2: *Materials · Material numbers according to DIN EN*

Valve body	CC499K (Rg 5)
Actuator	1.4301
Plug	1.4301 with EPDM seal
Restriction	Brass, free of dezincification
Plug stem	1.4305
Seat	CC499K
Valve spring	1.4310
Diaphragm	EPDM without fabric reinforcement
Threaded ends	Brass
Welding ends	1.0037 (St 37-2/S235JR)

Dimensions

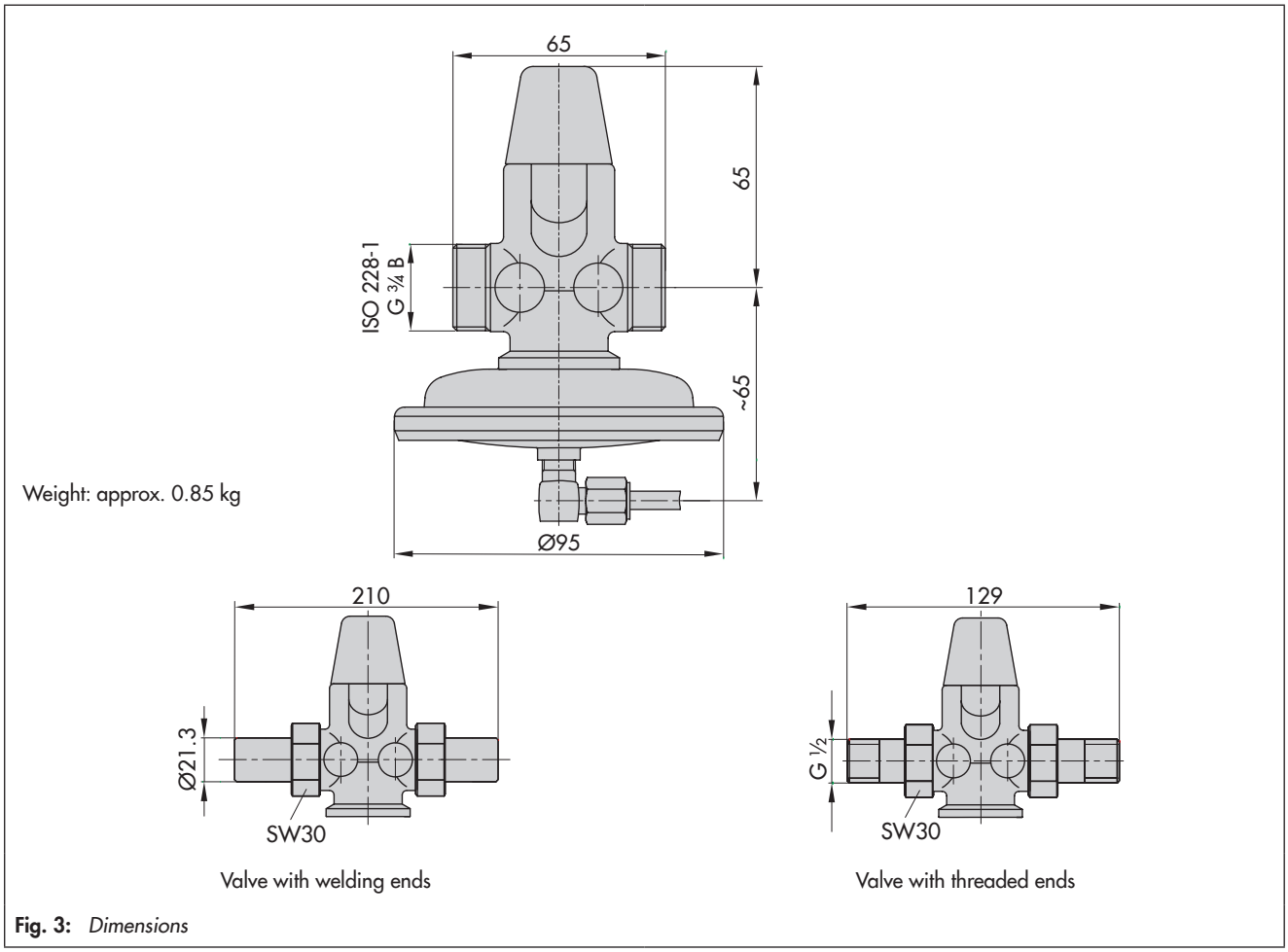

Fig. 3: *Dimensions*

Installation

- The direction of flow must match the direction indicated by the arrow on the body.
- Install the valve in horizontal pipelines with the actuator facing down.

Application

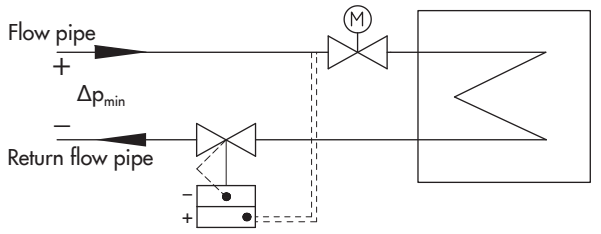

– – – – Internal connection between valve and actuator (hole in the plug and plug stem)

= = = = Control line to be attached on installing the regulator in the pipeline

Fig. 4: *Sample application*

Ordering text

Type 46-5 N Differential Pressure and Flow Limiter

Flow rate set point range for water with a differential pressure at the restriction of 0.2 bar: 0.2 to 1 m^3/h (standard version)/0.12 to 0.5 m^3/h (special version)

Differential pressure set point 0.2, 0.3 or 0.5 bar

Accessories:

- Connecting threads on both sides, with G ½ threaded ends or welding ends
- Connecting threads on both sides, with welding ends

Specifications subject to change without notice

SAMSON AG · MESS- UND REGELTECHNIK
Weismüllerstraße 3 · 60314 Frankfurt am Main, Germany
Phone: +49 69 4009-0 · Fax: +49 69 4009-1507
samson@samson.de · www.samson.de