Electric Control Valves with safety function, tested according to DIN EN 14597

Types 3213/5825, 3213/5725-3, 3213/5725-7, 3213/5725-8 and 3214/5825, 3214/3374, 3214/3274, 3214/5725-3, 3214/5725-7, 3214/5725-8

Single-seated Type 3213 Globe Valve, unbalanced
Single-seated Type 3214 Globe Valve, balanced

Application

Globe valves mounted on electric actuators with safety function to protect heating systems against excess temperatures or pressures

DN 15 to 250 · PN 16 to 40 · Temperatures up to 220 °C

The control valves consist of a globe valve and an electric actuator with safety function. The control valves can take on the task of a shut-off valve within safety interlock circuits triggered by the signal of a temperature or pressure limiting device or upon power supply failure.

The control valves are tested by the German Technical Inspectorate (TÜV) according to DIN EN 14597 and have been defined as shut-off and control devices.

Versions tested according to DIN EN 14597

– With **Type 3213 Globe Valve** · Unbalanced

Electric control valve		
Type 3213/5825	PN 25	DN 15 to 25
	PN 16	DN 32 to 50
Electric control valve with electric actuator with process controller for domestic hot water heating		
Type 3213/5725-3	PN 25	DN 15 to 25
	PN 16	DN 32 to 50
Electric control valves with electric actuator with process controller for heating and cooling applications		
Type 3213/5725-7	PN 25	DN 15 to 25
	PN 16	DN 32 to 50
Type 3213/5725-8	PN 25	DN 15 to 25
	PN 16	DN 32 to 50

– With **Type 3214 Globe Valve** balanced by a corrosion-resistant metal bellows

Electric control valves		
Type 3214/5825	PN 16 to 40	DN 15 to 50
Type 3214/3374	PN 16 to 40	DN 65 to 100
Type 3214/3274	PN 16 to 40	DN 125 to 250
Electric control valve with electric actuator with process controller for domestic hot water heating		
Type 3214/5725-3	PN 16 to 40	DN 15 to 50
Electric control valves with electric actuator with process controller for heating and cooling applications		
Type 3214/5725-7	PN 16 to 40	DN 15 to 50
Type 3214/5725-8	PN 16 to 40	DN 15 to 50

Fig. 1: *Type 3213/5825*

Fig. 2: *Type 3214/3374*

Fig. 3: *Type 3214/3274*

Register number

The actuators with safety function in conjunction with the listed valves are tested by the German Technical Inspectorate (TÜV) according to DIN EN 14597. The register number is available on request.

Also available: Type 3213 and Type 3214 Globe Valves with electric or pneumatic actuators (not tested according to DIN EN 14597), see Data Sheet ▶ T 5868

Principle of operation (Fig. 5)

A safety mechanism in the actuator is triggered when the voltage supply fails or the control signal is interrupted by the limitation equipment due to the temperature or pressure exceeding the adjusted limit. As a result, the valve is closed by the force of the compression springs in the actuator.
The medium flows through the single-seated globe valve in the direction indicated by the arrow. The cross-sectional area of flow between the seat (2) and plug (3) is determined by the position of the plug stem.
The Type 3214 Valve is balanced. The pressure upstream of the plug is transferred through a hole in the plug stem (4) and acts on the outside of the balancing bellows, whereas the pressure downstream of the plug acts on the inside of the bellows. As a result, the forces created by the differential pressure that act on the plug are eliminated. The Type 3214 Globe Valve can also be fitted with a flow divider St I. Refer to Data Sheet ▶ T 8081.
The plug is moved by changing the control signal applied to the actuator.
The valve and actuator have a force-locking connection for nominal sizes up to DN 50 and a form-fit connection for nominal sizes DN 65 and larger.

Electric actuators

The Types 5825 and 3374 Electric Actuators as well the Type 3274 Electrohydraulic Actuator can be controlled either using a three-step signal or, in the version with positioner, with signals from 0/4 to 20 mA or 0/2 to 10 V. Various electrical accessories can be optionally installed.
Refer to the data sheets for more details on the electric actuators:

▶ **T 5824:** Type 5825 Electric Actuator
▶ **T 8331:** Type 3374 Electric Actuator
▶ **T 8340:** Type 3274 Electrohydraulic Actuator

Electric actuators with process controllers

The electric actuator with process controller consists of a **linear actuator with an integrated digital controller**. The TROVIS 5725-3 Actuator is suitable for domestic hot water heating, whereas TROVIS 5725-7 is suited for heating and cooling applications. The TROVIS 5725-8 has two PID control modules and is ready-wired for heating and cooling applications.

Refer to the data sheets for more details on the electric actuators with process controller:

▶ **T 5724:** TROVIS 5725-3 Electric Actuator with Process Controller for domestic hot water heating
▶ **T 5725-7:** TROVIS 5725-7 Electric Actuator with Process Controller for heating and cooling applications
▶ **T 5724-8:** TROVIS 5725-8 Electric Actuator with Process Controller for heating and cooling applications

Installation of the control valve

Install the valve with the actuator in the upright position. Other mounting positions on request.
In safety interlock circuits, a strainer (e.g. Type 2 NI ▶ T 1015) must be installed upstream of the valve in the direction of flow.

Ordering text

Unbalanced control valve tested according to DIN EN 14597

❑ Type 3213/5825, ❑ Type 3213/5725-3,
❑ Type 3213/5725-7, ❑ Type 3213/5725-8

Version for steam: ❑ yes, ❑ no

Balanced control valve tested according to DIN EN 14597

❑ Type 3214/5825, ❑ Type 3214/3374, ❑ Type 3214/3274,
❑ Type 3214/5725-3, ❑ Type 3214/5725-7,
❑ Type 3213/5725-8

Version up to 220 °C: ❑ yes, ❑ no

- Nominal size: DN …
- Nominal pressure: PN …
- Kvs coefficient: …
- Max. permissible differential pressure Δp …
- Max. temperature …
- Body material …

Further specifications on the electric actuator

- Control: ❑ three-step signal, ❑ positioner
- Power supply …
- Electric additional equipment …

Terms for control valve sizing

according to IEC 60534, Parts 2-1 and 2-2: $F_L = 0.95$ $x_T = 0.75$

Selection and sizing of the control valve

1. Calculate K_V coefficient according to IEC 60534.
2. Select nominal size DN and K_{VS} coefficient from Table 3.
3. Check the permissible differential pressure from Table 3.
4. Check permissible temperature and select valve version from Table 1
5. Select suitable actuator from Table 3 and from the technical data of the actuators.
6. Select materials, pressure and temperature from Table 1 to Table 3 and from the pressure-temperature diagram (Fig. 4).
7. Select additional accessories depending on the electric actuator. Refer to technical data of the actuators for more details.

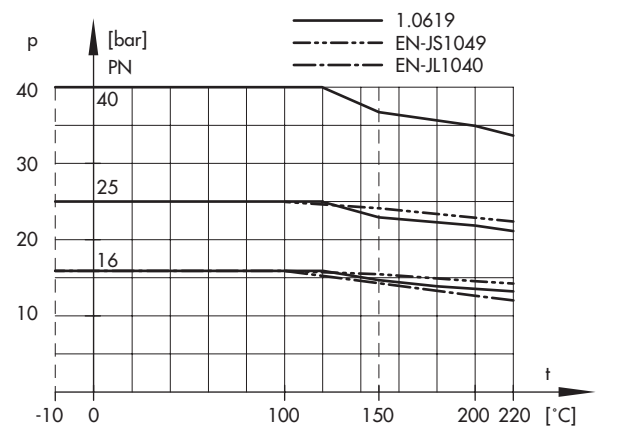

Fig. 4: *Pressure-temperature diagram*

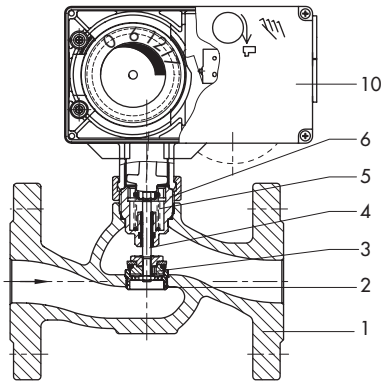

Type 3213/5825

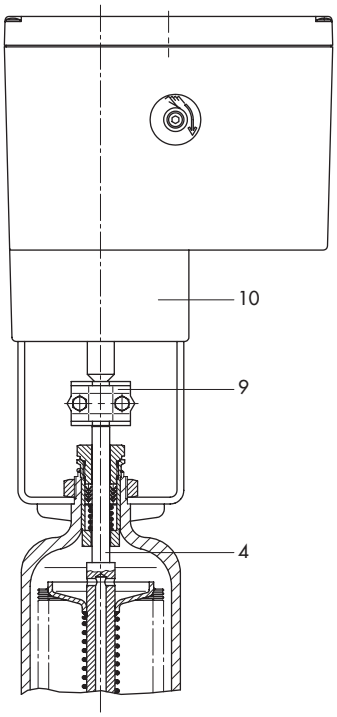

Type 3214/3374-21

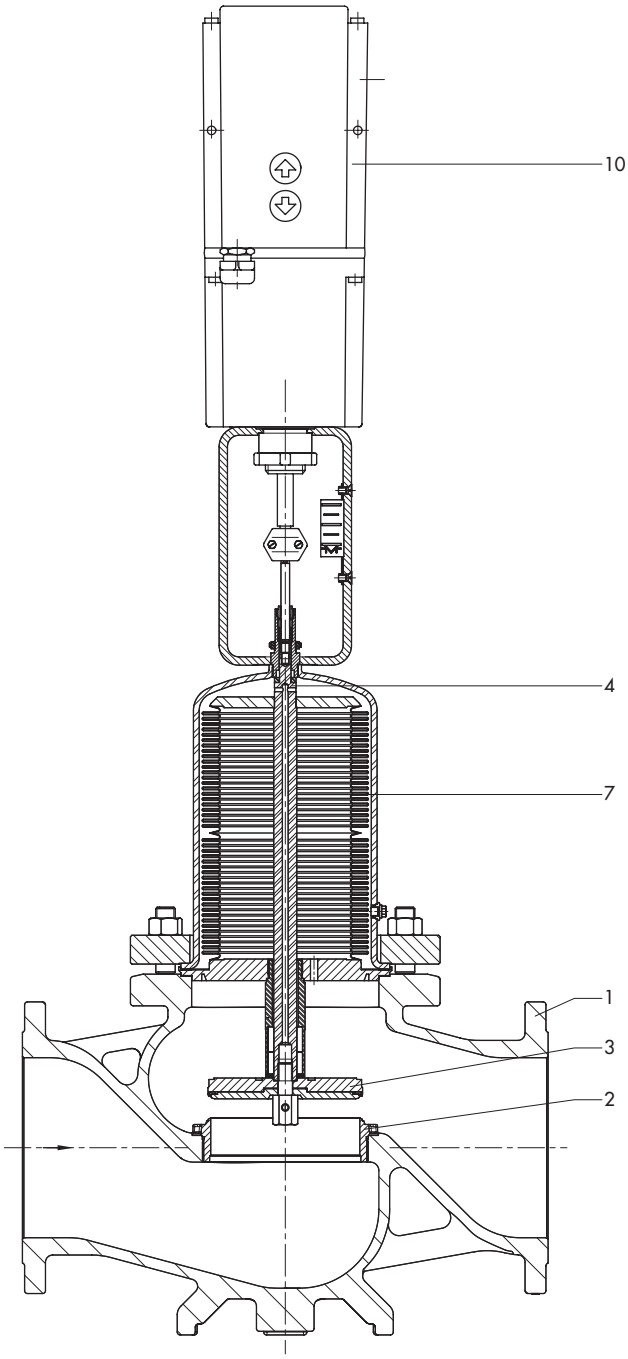

Type 3214/3274

1 Valve body
2 Seat
3 Plug
4 Plug stem
5 Valve spring
6 Guide nipple
7 Balancing bellows
9 Stem connector
10 Actuator

Fig. 5: *Functional diagrams*

Table 1: *Technical data*

Type 3213 Globe Valve														
Nominal size	DN	15	20	25	32	40	50	65	80	100	125	150	200	250
Nominal pressure	PN	25			16			–						
Max. permissible temperature (upright position)	°C	150 [1]			150 [1]									
Version for steam	°C	200			On request									
Rated travel	mm	6			12									
Rangeability		50:1												
Leakage class according to IEC 60534-4		Class I (≤0.05 % of K_{VS} coefficient)												
Compliance		CE · EAC												

Type 3214 Globe Valve														
Nominal size	DN	15	20	25	32	40	50	65	80	100	125	150	200	250
Nominal pressure	PN	16 to 40												
Max. permissible temperature (upright position)	°C	150 [2]						220			150 [3]			
Version up to 220 °C	°C	220						–						
Rated travel	mm	6			12			15			30			
Rangeability		50:1						40:1			30:1			
Leakage class according to IEC 60534-4		Class I (≤0.05 % of K_{VS} coefficient)									Class IV (≤0.01 % of K_{VS} coefficient)			
Compliance		CE · EAC												

1) Use intermediate insulating piece (1990-1712)
– for medium temperatures between –10 and +5 °C (actuators according to Table 4)
– in networks with constant medium temperatures > 135 °C (TROVIS 5724-3, TROVIS 5725-7, TROVIS 5724-8 and Type 5824 Actuators)

2) Use intermediate insulating piece (1990-1712)
– for medium temperatures between –10 and +5 °C (TROVIS 5725-3, TROVIS 5725-7, TROVIS 5725-8 and Type 5825 Actuators)
– in networks with constant medium temperatures > 135 °C (TROVIS 5725-3, TROVIS 5725-7, TROVIS 5725-8 and Type 5825 Actuators)

3) Special version with plug with metal seal or PTFE soft seal: 220 °C

Table 2: *Materials · Material numbers according to DIN EN*

Type 3213 Globe Valve Nominal pressure	PN 16	PN 25	PN 40
Valve body	EN-JL1040 (GG-25)	EN-JS1049 (GGG-40.3)	–
Seat	1.4305	1.4305	–
Plug	1.4305 with metal seal	Brass with EPDM soft sealing or FPM (FKM) seal	–
Special version	–	K_{VS} = 0.1 to 2.5: 1.4305 with metal sealing	–
Plug stem	1.4305		–
Spring	1.4310		–
Guide nipple	Brass with EPDM soft seal or FPM (FKM) seal		–
Insulating section with version for steam	1.4571		–
Type 3214 Globe Valve Nominal pressure	PN 16	PN 25	PN 40
Valve body	EN-JL1040 (GG-25)	EN-JS1049 (GGG 40.3) or 1.0619 (GS-C 25)	1.0619 (GS-C 25)
Special version	EN-JS1049 or 1.0619	–	–
Seat and plug			
DN 15 to 100	CrNi steel · Special version with EPDM soft seal		
DN 125 to 250	CrNiMo steel with EPDM soft seal · Special version with metal seal		
Plug stem	1.4301		
Spring	–		
Bellows housing	1.0425		
Balancing bellows	1.4571		
Guide nipple (DN 15 to 50)	Brass with EPDM soft seal or FPM (FKM) seal		
Packing (DN 65 to 250)	V-ring packing, PTFE with carbon		
Insulating section for version up to 220 °C	1.4305 with EPDM seal or FPM (FKM) seal		

Table 3: *Nominal sizes, K_{VS} coefficients and maximum differential pressures*

Type 3213 Globe Valve														
Nominal size	DN	15	20	25	32	40	50	65	80	100	125	150	200	250
Rated travel	mm	6	6	6	12	12	12	–						
K_{VS} coefficient		4	6.3	8	16	20	32							
Max. diff. pressure	bar	10	10	10	2.9	2.9	1.6							
Special version														
K_{VS} coefficient		0.1 · 0.16 0.25 · 0.4 0.63 · 1.0 1.6	2.5	2.5	–	–	–	40						
Max. diff. pressure	bar	20	10	10	–	–	–	1						
Type 3214 Globe Valve														
Nominal size	DN	15	20	25	32	40	50	65	80	100	125	150	200	250
Rated travel	mm	6	6	6	12	12	12	15	15	15	30	30	30	30
K_{VS} coefficient		4	6.3	8	16	20	32	50	80	125	200	320	500	600
With flow divider		–	–	–	–	–	–	38	60	95	150	210	315	375
Reduced K_{VS} coefficient		2.5	2.5	2.5	8	8 · 16	8 · 16	–	–	–	–	–	–	–
Max. diff. pressure	bar	25	25	25	25	25	25	20	20	16	16	12 [1]	10 [1]	10 [1]

[1] Use a special version for applications with steam on using a Type 3274 Actuator in sizes DN 150 to 250.

Table 4: *Possible combinations*

Type 3213 Globe Valve/actuator														
Type/ TROVIS	Refer to data sheet for details	Nominal size DN												
		15	20	25	32	40	50	65	80	100	125	150	200	250
Electric actuators														
5825-10	▶ T 5824	•	•	•	–			–						
5825-13 [1]		•	•	•	–									
5825-20		–			•	•	•							
5825-23 [1]		–			•	•	•							
Electric actuators with process controllers for domestic hot water heating														
5725-310	▶ T 5724	•	•	•	–			–						
5725-313 [1]		•	•	•	–									
5725-320		–			•	•	•							
5725-323 [1]		–			•	•	•							
Electric actuators with process controller for heating and cooling applications														
5725-710	▶ T 5725-7	•	•	•	–			–						
5725-720		–			•	•	•							
5725-810	▶ T 5724-8	•	•	•	–			–						
5725-820		–			•	•	•							

Type 3214 Globe Valve/actuator														
Type/ TROVIS	Refer to data sheet for details	Nominal size DN												
		15	20	25	32	40	50	65	80	100	125	150	200	250
Electric actuators														
5825-10	▶ T 5824	•	•	•	–									
5825-13 [1]		•	•	•	–									
5825-20		–			•	•	•	–						
5825-23 [1]		–			•	•	•	–						
3374-21	▶ T 8331	–						•	•	•	–			
3274-23	▶ T 8340	–									•	•	•	•
Electric actuators with process controllers for domestic hot water heating														
5725-310	▶ T 5724	•	•	•	–									
5725-313 [1]		•	•	•	–									
5725-320		–			•	•	•	–						
5725-323 [1]		–			•	•	•	–						
Electric actuators with process controller for heating and cooling applications														
5725-710	▶ T 5725-7	•	•	•	–									
5725-720		–			•	•	•	–						
5725-810	▶ T 5724-8	•	•	•	–									
5725-820		–			•	•	•	–						

[1] Version with half transit time

Table 5: *Dimensions and weights with actuator*

Table 5.1: *Control valves with Type 3213 Globe Valve*

Nominal size		DN	15	20	25	32	40	50
Overall length	Length L	mm	130	150	160	180	200	230
Height	Height H1	mm	60	60	60	125	125	125
	Height H	mm	190	190	190	255	255	255
Weight (version for steam + 0.3 kg)								
Type 3213/5825		Approx. kg	3.1	3.7	4.1	12.5	14.5	16.5
Types 3213/5725-3, 3213/5725-7, 3213/5725-8		Approx. kg	3.15	3.75	4.15	12.55	14.55	16.55

Electric control valves with Type 3213 Globe Valve

*** Dimensions for Type 5825-x3, TROVIS 5725-3x3 Actuators:**
146 x 136

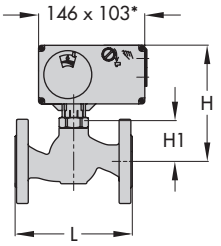

Type 3213/5825: DN 15 to 50
Type 3213/5725-3: DN 15 to 50
Type 3213/5725-7: DN 15 to 50
Type 3213/5725-8: DN 15 to 50

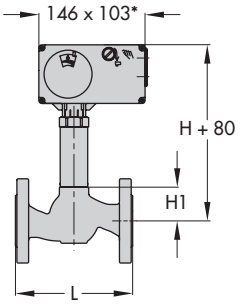

Version for steam

Type 3213/5825: DN 15 to 50
Type 3213/5725-3: DN 15 to 50
Type 3213/5725-7: DN 15 to 50
Type 3213/5725-8: DN 15 to 50

Table 5.2: *Control valves with Type 3214 Globe Valve*

Nominal size		DN	15	20	25	32	40	50	65	80	100	125	150	200	250
Overall length	Length L	mm	130	150	160	180	200	230	290	310	350	400	480	600	730
Height	Height H1	mm	225	225	225	225	225	225	305	305	355	580	710	860	860
	Height H	mm	350	350	350	350	350	350	599	599	649	900	1030	1180	1180
	Height H2	mm	55	55	55	72	72	72	100	100	120	145	175	270	270
	Height H3	mm	–									1050	1180	1330	1330
Weight (version up to 220 °C: +0.3 kg · Version for PN 25 and 40: +15 %)															
Type 3214/5825		Approx. kg	7	7.5	8.5	15	15.5	18	–						
Types 3214/5725-3, 3214/5725-7, 3214/5725-8		Approx. kg	7.05	7.55	8.55	15.05	15.55	18.05	–						
Type 3214/3374		Approx. kg	–						35	40	47	–			
Type 3214/3274		Approx. kg	–						–			87	128	271	315

Electric control valves with Type 3214 Globe Valve

***Dimensions for Type 5825-x3, TROVIS 5725-3x3 Actuators:**
146 x 136

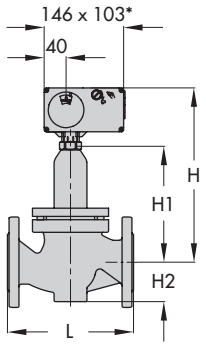

Type 3214/5825: DN 15 to 50
Type 3214/5725-3: DN 15 to 50
Type 3214/5725-7: DN 15 to 50
Type 3214/5725-8: DN 15 to 50

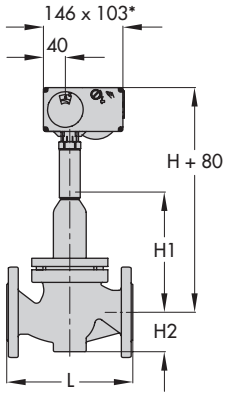

Version up to 220 °C

Type 3214/5825: DN 15 to 50
Type 3214/5725-3: DN 15 to 50
Type 3214/5725-7: DN 15 to 50
Type 3214/5725-8: DN 15 to 50

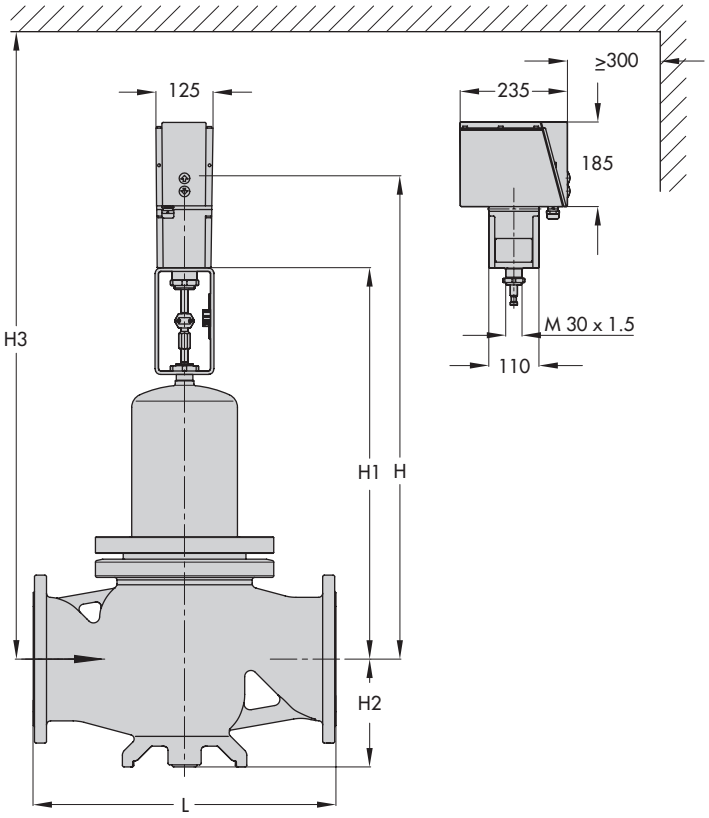

Type 3214/3274: DN 125 to 250

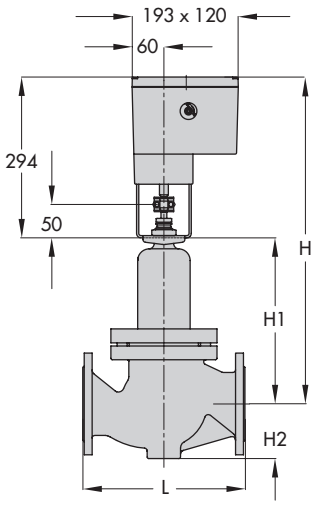

Type 3214/3374-21: DN 65 to 100

Specifications subject to change without notice

SAMSON AG · MESS- UND REGELTECHNIK
Weismüllerstraße 3 · 60314 Frankfurt am Main, Germany
Phone: +49 69 4009-0 · Fax: +49 69 4009-1507
samson@samson.de · www.samson.de