Series 240

Electric Control Valves with safety function, tested according to DIN EN 14597
Type 3241/3274, Type 3241/3374
Type 3241 Globe Valve

Application

Control valves with safety function to protect heating systems against excess temperatures or pressures. Suitable for water and steam.

DN 15 to 150 · PN 16 to 40 · Version up to 220 °C (version with insulating section up to 350 °C)

Type 3241/3274 and Type 3241/3374 Control Valves tested according to DIN EN 14597 consist of a Type 3241 Globe Valve and either a Type 3274 Electrohydraulic Actuator or a Type 3374 Electric Actuator with safety function (up to DN 80). Refer to Data Sheets ▶ T 8331 and ▶ T 8340 for more details.

The control valves are used to regulate the temperature using a current or voltage signal. In safety interlock circuits, they also serve as a shut-off device that is triggered upon a power failure.

The control valves are tested by the German Technical Inspectorate (TÜV) according to DIN EN 14597 and have been defined as shut-off and control devices. They are suitable for water and steam. The standard version can be used for temperatures up to 220 °C, the version with insulating section up to 350 °C at a maximum ambient temperature of 60 °C.

In safety interlock circuits, a strainer (e.g. Type 2 NI, refer to Data Sheet ▶ T 1015) must be installed upstream of the valve in the direction of flow.

- Valve body made of cast iron, spheroidal graphite iron, cast steel, cast stainless steel, forged steel 1.0460 (C22.8) or 1.4571
- Undivided valve bonnet
- Standard low-noise plug with metal sealing
- Special version with flow divider for further noise reduction
- Versions in DN 65 to 150 also with balanced plug and PTFE seal (max. temperature 220 °C)

Fig. 1: *Type 3241/3274 Standard version (tested according to DIN EN 14597)*

Fig. 2: *Type 3241/3374-26 (tested according to DIN EN 14597)*

Versions

Type 3241/3274 tested according to DIN EN 14597 · Standard version up to 220 °C (Fig. 1) · DN 15 to 150, PN 16 to 40. Type 3241 Globe Valve with Type 3274-23 Electric Actuator with fail-safe action and with electric override

Type 3241/3374 tested according to DIN EN 14597 (Fig. 2) DN 15 to 80, PN 16 to 40. Type 3241 Globe Valve with Type 3374-26 Electric Actuator with fail-safe function

Version with unbalanced plug · Metal-seated plug, PTFE/carbon compound packing

Version with balanced plug · PTFE seal for temperatures up to max. 220 °C, DN 65 to 150, PN 40 · With Type 3274-21 Actuator

Version with flow divider · DN 32 to 150, also for special version with insulating section (refer to Data Sheet ▶ T 8081)

Special version with insulating section for temperatures up to 350 °C including unbalanced metal-seated plug

Register number

The Type 3241 Globe Valves are tested by the German Technical Inspectorate (TÜV) according to DIN EN 14597 in combination with the Type 3374 Electric Actuator and Type 3274 Electrohydraulic Actuator.

The register number is available on request.

Principle of operation for Type 3274

The actuator mainly consists of the actuator housing containing the motor with oil pump, the cylinder housing containing the piston, a spring return mechanism and an additional safety solenoid valve that opens upon interruption or failure of the power supply and relieves the pressure in the chamber. The spring moves the actuator stem to the fail-safe position.

Principle of operation of Type 3374

The actuator consists of a reversible synchronous motor and a maintenance-free planetary gear with ball screw. The motor is switched off by torque-dependent switches in the end positions or in case of overload. The gear is disengaged inside the actuator in case of an interruption or failure of the power supply or if the safety limiter interrupts the safety interlock circuit because an adjusted temperature or pressure limit is exceeded. As a result, the springs in the actuator close the valve.

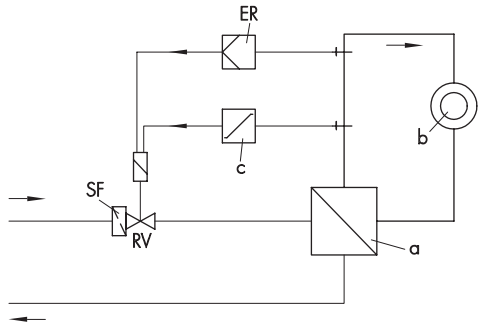

a	Heat generators or heat exchanger	RV	Control valve with safety function
b	Consumer	SF	Strainer
c	Safety limiter	ER	Electric controller

Fig. 3: *Connection diagram for Type 3241/3274 or Type 3241/3374 Electric Control Valves (tested according to DIN EN 14597)*

Ordering text

- Electric Control Valve with safety function · Type 3241/3274 or Type 3241/3374, tested according to DIN EN 14597
- DN …, PN …, body material …
- Max. operating temperature … °C, maximum Δp … bar
- Without/with insulating section, balanced/unbalanced plug
- K_{VS} coefficient ...
- Characteristic: equal percentage, linear or quick-opening
- Power supply … V, … Hz
- Additional electrical equipment
- Optionally, special version

Table 1: *Technical data*

Nominal size	**DN**	**15 · 20 · 25 · 32 · 40 · 50 · 65 · 80 · 100 · 125 · 150**
Nominal pressure		PN 16 to 40
Permissible temperatures		
Without insulating section	°C	Max. 220
With insulating section	°C	Max. 350
Valves with balanced plugs	°C	Max. 220
Permissible operating pressures		According to the pressure-temperature diagram, refer to Information Sheet ▶ T 8000-2
Seat/plug seal		Metal seal
Type of connection		All flange types acc. to DIN
Characteristic		Equal percentage · Linear · Quick opening
Leakage class according to IEC 60534-4		≤ Class IV (≤ 0.01 % of K_{VS} coefficient)
Compliance		CE · EAC

Table 2: *Materials*

Nominal pressure	**PN 16**	**PN 16/25**	**PN 16/40**		**PN 40**	
Valve body	EN-GJL-250 (GG-25) [1]	EN-GJS-400-18-LT (GGG-40.3)	1.0619 (GS-C25)	1.0460 (C22.8)	1.4408	1.4571
Valve bonnet	1.4060 (C22.8)			1.0460	1.4408/1.4401	
Seat (seat and plug also with Stellite facing)	1.4006					
Plug						
Guide bushings	1.4104			1.4104		
Packing	V-ring packing, PTFE with carbon (other packings on request) · Spring 1.4310					
Body gaskets	Graphite on metal core					
Insulating section	1.0460 (C22.8)				1.4408/1.4401	
Metal bellows seal						
Intermediate piece	1.0460 (C22.8)				1.4408/1.4401	
Metal bellows	1.4571					
Heating jacket	1.4404					

[1] In plants according to the German technical rules for steam boilers (TRD) only up to DN 50 and max. perm. operating pressure of 10 bar

Table 3: *Overview: Nominal sizes, K_{VS} coefficients, seat diameters and permissible differential pressures Δp in bar when p_2 = 0 bar*
All pressures in bar (gauge). Direction of flow: FTO

Table 3.1: *Type 3241/3274 and Type 3241/3374 without flow divider*

K_{VS} coefficient	0.1	0.16	0.25	0.4	0.63	1.0	1.6	2.5	4.0	6.3	10	16	25	40	60	63	80	100	160	200	260
Seat Ø [mm]	3			6			12			24		31	38	48	63		80	80	100	110	130
Travel [mm]	15															30	15	30			
DN																					
15	•	•	•	•	•	•	•	•	•												
20	•	•	•	•	•	•	•	•	•	•											
25	•	•	•	•	•	•	•	•	•	•	•										
32				•	•	•	•	•	•	•	•	•									
40				•	•	•	•	•	•	•	•	•	•								
50				•	•	•	•	•	•	•	•	•	•	•							
65													•	•	•						
80													•	•	•		•				
100																•		•	•		
125																		•	•	•	
150																•			•		•
Permissible operating pressure p and permissible differential pressure Δp [bar] · For thrust, refer to ▶ T 8340 and ▶ T 8331																					
Without balanced plug																					
Type 3274-23	40	40	40	40	40	40	40	40	40	40	40	37.8	24.8	15.2	8.5	7.2	5.0	4.2	2.5	2.0	1.3
Type 3374-26	40	40	40	40	40	40	40	40	40	35.6	35.6	20.8	13.5	8.1	4.4	–	2.5	–	–	–	–
Balanced (PTFE)																					
Type 3274-21 without bellows seal	–	–	–	–	–	–	–	–	–	–	–	–	–	–	–	–	40	39	29.5	25	15
Type 3274-21 with bellows seal	–	–	–	–	–	–	–	–	–	–	–	–	–	–	–	–	27.5	5.7	3.8	2.9	0.9

Table 3.2: *Type 3241/3274 and Type 3241/3374 with flow divider St I and St III*

	Flow divider St I												Flow divider St III					
K_{VS} coefficient	5.7	9	14.5	22	36	54	57	72	90	144	180	234	7.5	20	30	47	75	120
Seat Ø [mm]	24		31	38	48	63		80		100	110	130	24	38	48	63	80	100
Rated travel [mm]	15						30	15	30				15			30		
DN																		
32	•	•																
40	•	•	•	•														
50	•	•	•	•	•								•					
65				•	•	•								•	•			
80				•	•	•		•						•	•	•		
100							•		•	•						•		
125									•	•	•						•	
150									•	•		•					•	•
Permissible operating pressure p and permissible differential pressure Δp [bar] · For thrust, refer to ▶ T 8340 and ▶ T 8331																		
Without balanced plug																		
Type 3274-23	40	40	37.7	24.8	15.2	8.5	7.2	5.0	4.2	2.5	2.0	1.3	40	24.8	15.2	7.3	4.2	2.5
Type 3374-26	35.6	35.6	20.8	13.5	8.1	4.4	–	2.5	–	–	–	–	35.8	13.5	8.1	–	–	–
Balanced (PTFE)																		
Type 3274-21 without bellows seal	–	–	–	–	–	–	–	40	39	29.5	25	15	40	40	40	40	40	40
Type 3274-21 with bellows seal								27.5	5.7	3.8	2.9	0.9	40	40	37	7.5	5.7	3.8

Table 4: *Possible combinations for Type 3241 Globe Valve/actuators (version tested according to DIN EN 14597)*

Type 3241 Globe Valve												
	Refer to Data Sheet for details	Nominal size DN										
Type		15	20	25	32	40	50	65	80	100	125	150
3274-23	▶ T 8340	•	•	•	•	•	•	•	•	•	•	•
3274-21		–	–	–	–	–	–	•	•	•	•	•
3374-26	▶ T 8331	•	•	•	•	•	•	•	•	–	–	–

Table 5: *Dimensions and weights*

Nominal size	DN	15	20	25	32	40	50	65	80	100	125	150
Length L	mm	130	150	160	180	200	230	290	310	350	400	480
Height H1	mm	H2 + H										
Height H2	mm	222	222	222	223	223	223	262	262	354	363	390
Height H3	mm	61	61	61	61	61	61	61	61	75	75	75
Height H4, fail-close	mm	75	75	75	75	75	75	75	75	90	90	90
Height H5	approx. mm	44	44	44	72	72	72	98	98	118	144	175
Height H												
Type 3241/3274	mm	320										
Type 3241/3374	mm	204								–	–	–
Height H6												
Type 3241/3274	mm	150										
Type 3241/3374	mm	300								–	–	–
Height H9 (including insulating section)	mm	409	409	409	410	410	410	451	451	636	645	672
Weight												
Type 3241/3274 without insulating section	kg (approx.)	18	19.5	20	24	26	30	41	46	64	93	120
Type 3241/3274 with insulating section	kg (approx.)	21	22.5	23	30	32	36	49	54	82	118	150
Type 3241/3374 without insulating section	kg (approx.)	9	10	11	15	17	21	32	37	–	–	–
Type 3241/3374 with insulating section	kg (approx.)	12	13	14	21	23	27	40	45	–	–	–

Type 3241/3274

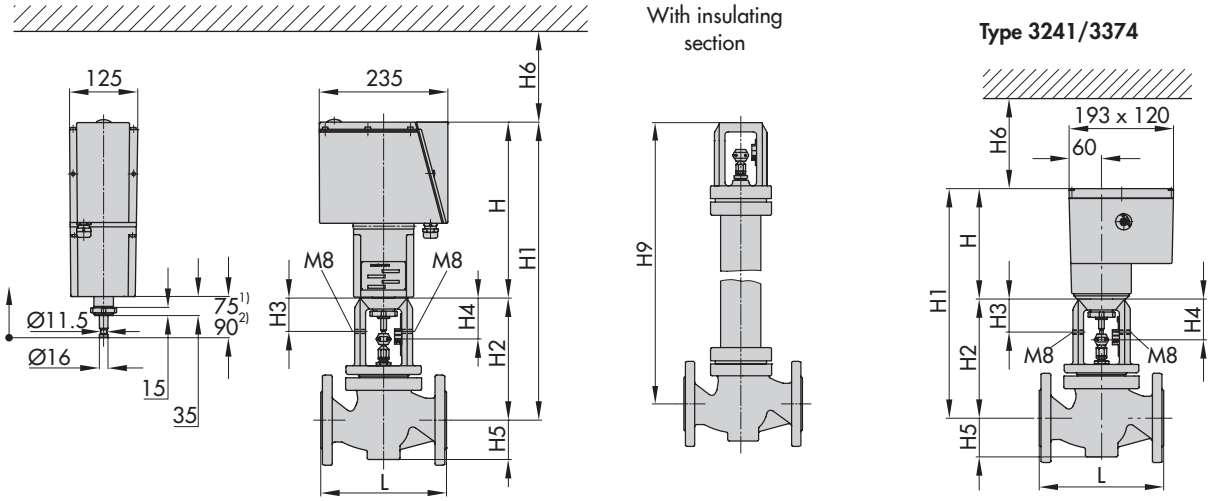

1) With 15 mm travel
2) With 30 mm travel

Specifications subject to change without notice

SAMSON AG · MESS- UND REGELTECHNIK
Weismüllerstraße 3 · 60314 Frankfurt am Main, Germany
Phone: +49 69 4009-0 · Fax: +49 69 4009-1507
samson@samson.de · www.samson.de

T 5871 EN

2016-05-10 · English