Series 250
Control Valves with Ceramic Trims

Application

Control valves in process engineering where the valve body and trim are subject to erosive and abrasive wear

Nominal size	**DN 25 to 150**
Nominal pressure	**PN 16 to 400**
Temperatures	**Up to 500 °C**

In industrial plants, pneumatic and electric control valves are used to control the flow of various process media often under adverse flow conditions. In flashing service and in applications involving corrosive media containing solid particles, the valve body and trim (seat and plug) are subject to erosive and abrasive wear.

In some applications, trims made of cast material or PTFE are worn out within a few days, while trims with Stellite facings or made of forged titanium last only a few weeks. In contrast, low-wear ceramic trims have no significant signs of wear after one year in service.

Depending on the valve design and special properties of the ceramic material used, the following advantages are attained:

- Seat and plug made of hot-pressed silicon nitride
- Constant high flexural strength and resistance to abrasive wear
- Corrosion resistance
- Service life 200 times longer than valve trims made of austenitic steel when subjected to erosive and abrasive wear
- Longer service life of angle valve bodies due to the use of flow-to-close direction and an additional anti-wear pipe made of silicon carbide (SiC)

The control valves, designed according to the modular assembly principle, can be equipped with various accessories:

Positioners, solenoid valves and other accessories according to IEC 60534-6 and NAMUR recommendation. Refer to Information Sheet ▶ T 8350 EN for more details.

Versions

The pneumatic control valves shown in Fig. 1 and Fig. 2 can be fitted with ceramic trims. The Type 3271 Pneumatic Actuator is mounted on the valves.

– **Type 3251-1** · Type 3251 Globe Valve
– **Type 3256-1** · Type 3256 Angle Valve

Further versions

– **Electric actuator** · On request

Fig. 1: *Type 3251-1 Pneumatic Control Valve with Type 3271 Actuator*

Fig. 2: *Type 3256-1 Pneumatic Control Valve with Type 3271 Actuator*

Associated Information Sheet **T 8000-X EN**

Edition February 2008

Data Sheet **T 8071 EN**

Fail-safe position

Depending on how the springs are arranged in the pneumatic actuator (see Data Sheets ▶ T 8310-1 EN, T 8310-2 EN and T 8310-3 EN), the valve has two different fail-safe positions effective upon air supply failure:

Actuator stem extends (fail-close)

The valve is closed upon air supply failure.

Actuator stem retracts (fail-open)

The valve is opened upon air supply failure.

Materials

The data sheets listed in Table 1 contain exact details on the materials used.

The valve bodies are available in standard or cast stainless steel as well as in cold-resisting or high-temperature cast steel.

The ceramic trims (plug and seat or seat ring) are made of silicon nitride (Si3N4), which is hot-pressed at 1700 to 1800 °C. The anti-wear pipe is made of hot-pressed silicon carbide (SiC).

The favorable properties of these materials are listed in Table 2.

Permissible differential pressures Δp

The data sheets specified in Table 1 contain the permissible differential pressures for versions with K_{VS} 1.6 to 160. In this case, the assignment of the nominal sizes and seat diameters to the flow coefficients applies as listed in Table 3.

Permissible differential pressures for versions with ≤ K_{VS} 1 are available on request.

Selection and sizing of the control valve

Control valves with ceramic trims must be sized carefully. Therefore, SAMSON performs the final sizing.

1. Calculate the suitable K_{VS} coefficient according to IEC 60534.
2. Select nominal size DN and K_{VS} coefficient from Table 3.
3. Determine the permissible differential pressure Δp and select the suitable actuator from the data sheets listed in Table 1.
4. Select the materials and additional equipment according to the pressure-temperature diagram and the corresponding data sheets.

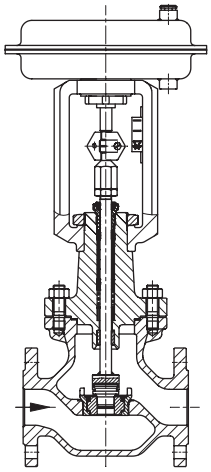

Fig. 3: *Type 3251-1 with ceramic trim*

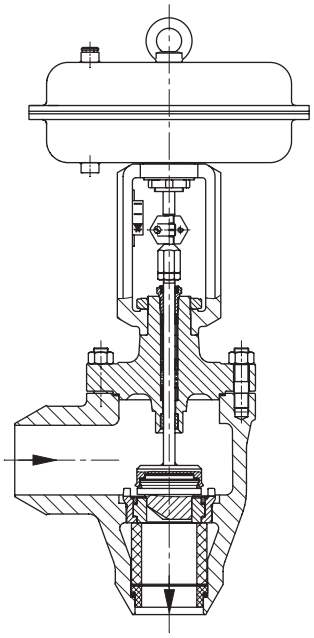

Fig. 4: *Type 3256-1 with ceramic trim and ceramic anti-wear pipe*

Table 1: *Technical data*

Valve		**Type**	**3251**	**3256**
Actuator [1]		Type	Type 3271 or Type 3277 (up to 700 cm²)	
Body style	Globe valve		•	–
	Angle valve		–	•
Valve sizes		DN	25 · 50 · 80 · 100 · 150	
Nominal pressure		PN	16 to 400	
Reinforcement				
Ceramic trims			HPSN (Si_3N_4)	
Ceramic anti-wear pipe			–	SiC
Temperature ranges (see associated data sheet) · Permissible operating pressures according to pressure-temperature diagrams (see Information Sheet ▶ T 8000-2 EN)				
Temperature ranges			–250 to +500 °C	
Leakage class according to IEC 60534-4				
Valve plug			IV-S2	
Refer to data sheet for details			▶ T 8051 EN	▶ T 8065 EN

[1] Type 3251-2 and Type 3256-2 Electric Control Valves on request

Table 2: *Material properties of ceramic*

Material		**HPSN**	**SiC**
Flexural strength (four-point)	N/mm²	600 to 800	> 350
Tensile strength	N/mm²	300 to 500	> 180
Compression strength	N/mm²	2500	> 1200
Elastic modulus	kN/mm²	310 to 320	> 330
Hardness HV 10	N/mm²	> 16000	> 21000
Thermal expansion (α)	10^{-6}/°C	3.2	4.3
Corrosion resistance		Better than all metals used for valves	

Table 3: *K_{VS} coefficients and z values · Overview*

K_{VS}	0.1 · 0.16 · 0.25 0.4 · 0.63	1.0	1.6	2.5	4.0	6.3	10	16	25	40	63	100	160
Seat Ø mm	8	12				24		31	38	50	63	80	100
Rated travel mm	15									30			

Table 3.1: *Type 3251 Globe Valve with ceramic trim*

Flow-to-open · Areas highlighted in gray indicate versions also with pressure balancing

K_{VS}	0.1 · 0.16 · 0.25 0.4 · 0.63	1.0	1.6	2.5	4.0	6.3	10	16	25	40	63	100	160
DN	z values												
25	0.75	0.65	0.65	0.55	0.55								
50						0.5	0.45	0.5					
80								0.5	0.45	0.35			
100										0.35	0.35		
150											0.35	0.25	0.25
Terms for control valve sizing according to IEC 60534, Parts 2-1 and 2-2: $F_L = 0.95$, $X_T = 0.75$													

Table 3.2: *Type 3256 Angle Valve with ceramic trim and ceramic anti-wear pipe*

Flow-to-close · Areas highlighted in gray indicate versions also with pressure balancing

K_{VS}	0.1 · 0.16 · 0.25 0.4 · 0.63	1.0	1.6	2.5	4.0	6.3	10	16	25	40	63	100	160
DN	z values												
25	0.15	0.15	0.15	0.15	0.15								
50						0.15	0.15	0.15					
80								0.15	0.15	0.15			
100										0.15	0.15		
150											0.15	0.15	0.15
Terms for control valve sizing according to IEC 60534, Parts 2-1 and 2-2: $F_L = 0.85$, $X_T = 0.6$													

Order specifications:

Nominal size	DN
Nominal pressure	PN
Body material	According to associated data sheet
Type of end connections	Flanges/welding ends
Plug	Ceramic/with balanced valve plug
Characteristic	Equal percentage or linear
Anti-wear pipe	For Type 3256
Actuator	Versions according to Data Sheets ▶ T 8310-1 EN, T 8310-2 EN and T 8310-3 EN
Fail-safe position	Fail-close or fail-open
Process medium	Density in kg/m³ and temperature in °C or K
Flow rate	kg/h or m³/h in standard or operating state
Pressure	p_1 and p_2 in bar (absolute pressure p_{abs}) (with minimum, normal and maximum flow rate
Valve accessories	Positioner and/or limit switch

Specifications subject to change without notice

SAMSON AG · MESS- UND REGELTECHNIK
Weismüllerstraße 3 · 60314 Frankfurt am Main, Germany
Phone: +49 69 4009-0 · Fax: +49 69 4009-1507
samson@samson.de · www.samson.de