Type 3510-1 and Type 3510-7 Pneumatic Control Valves
Type 3510 Micro-flow Valve

ANSI version

Application

Control valve especially designed for controlling low flow rates in pilot plants and technical research facilities

Valve size	**G, NPT and Rc female thread in** ⅛" · ¼" · ⅜" · ½" · ¾"
	Flanges, welding ends NPS ½ · ¾ · 1
Pressure rating	**Class 150 to 2500**
Temperatures	**–196 to +450 °C · –325 to +842 °F**

Type 3510 Micro-flow Valve with

- Type 3271-5 Pneumatic Actuator
- Type 3277-5 Pneumatic Actuator

Available as

- Globe valve
- Angle valve

Valve body made of

- G, NPT or Rc female thread
- Welding ends or flanges

Stainless steel is used as the standard body material. However, a wide variety of special materials can also be used on customer request.

A mounting kit (1400-9031) provides the valve with an interface according to IEC 60534-6-1 (NAMUR) for attachment of positioners, limit switches, solenoid valves and other valve accessories. We recommend using an insulating section or bellows seal for flanged valves to provide more space to mount valve accessories.

Standard version

- For temperatures from 14 to 428 °F (–10 to +220 °C)
- Class 150 to 2500
- Globe or angle valve
- Female thread G ⅛, G ¼, G ⅜, G ½, G ¾ or ⅛ NPT, ¼ NPT, ⅜ NPT, ½ NPT, ¾ NPT or Rc ⅛, Rc ¼, Rc ⅜, Rc ½, Rc ¾
- Flanges NPS ½, ¾, 1, Class 150 to 2500
- Welding ends NPS ½ and NPS 1 with welding-neck ends

Type 3510-1 · With Type 3271-5 Pneumatic Actuator (120 cm²) · See Data Sheet ▶ T 8310-1

Type 3510-7 (Fig. 1 and Fig. 2) · With Type 3277-5 Pneumatic Actuator (120 cm²) for integral positioner attachment See Data Sheet ▶ T 8310-1

Fig. 1: *Type 3510-7 Control Valve with Type 3725 Positioner*

Fig. 2: *Type 3510-7 Control Valve with Type 3767 Positioner*

Further versions

- **Insulating section** for temperatures from –325 to +842 °F (–196 to +450 °C), with special material up to +1200 °F (+650 °C)
- **Metal bellows seal** up to Class 1500 with a sealing performance of ≤ 10^{-5} (mbar l)/s
- **Handwheel**
- **Electric actuator** · On request
- **Stainless steel actuator** for ambient temperatures down to –76 °C (–60 °C) · On request

Principle of operation

The medium flows through the micro-flow valve in the direction indicated by the arrow. The plug position determines the cross-sectional area between the seat and plug.

The plug stem is connected to the actuator stem by the stem connector and sealed with an adjustable packing.

To comply with stricter environmental emissions requirements, the valve can be equipped with a double-walled metal bellows.

The anti-rotation fixture prevents a loosening of the screw connection between the valve body and the bonnet or the intermediate piece.

Fail-safe position

Depending on how the springs are arranged in the pneumatic actuator (▶ T 8310-1), the valve has two different fail-safe positions.

Actuator stem extends (fail-close)
The valve is closed upon air supply failure.

Actuator stem retracts (fail-open)
The valve is opened upon air supply failure.

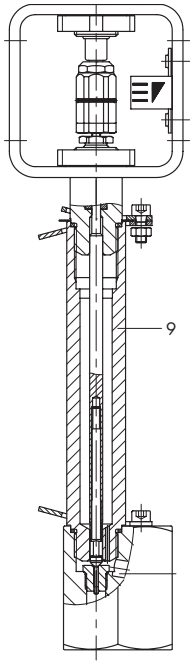

Fig. 3: *Type 3510 Valve, angle valve with insulating section*

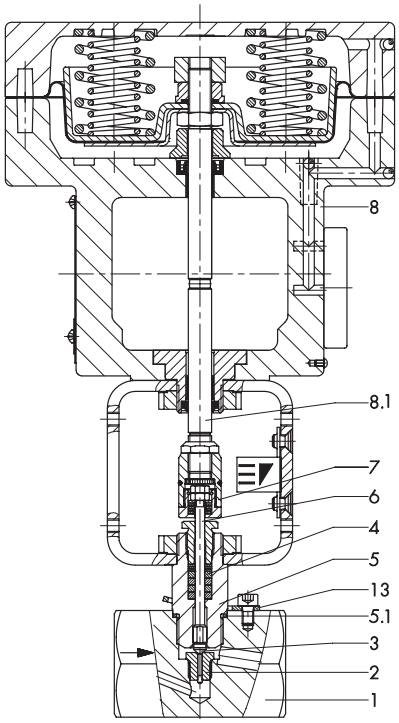

Fig. 4: *Type 3510-7 Control Valve*

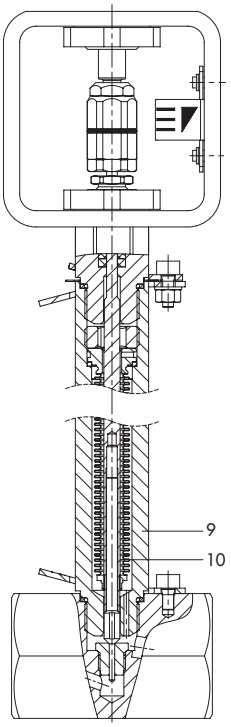

Fig. 5: *Type 3510 Valve, globe valve with metal bellows seal*

Legend

1	Valve body	5.1	Body gasket	9	Intermediate piece for insulating section or bellows seal
2	Seat	6	Plug stem	10	Metal bellows
3	Plug	7	Stem connector	13	Anti-rotation fixture
4	Packing	8	Actuator		
5	Valve bonnet	8.1	Actuator stem		

Table 1: *Technical data for Type 3510*

Connection	Female thread	Welding ends	Flanges
Valve size	G ⅛ · G ¼ · G ⅜ · G ½ · G ¾ ⅛ NPT · ¼ NPT · ⅜ NPT · ½ NPT · ¾ NPT Rc ⅛ · Rc ¼ · Rc ⅜ · Rc ½ · Rc ¾	NPS ½ · NPS 1	NPS ½ · NPS ¾ · NPS 1
Pressure rating	Class 150 to 2500		
Seat/plug seal	Metal to metal		
Characteristic	Equal percentage with $C_V \geq 0.012$ · Linear · Quick opening		
Rangeability	50:1 · Lower than 50:1 with < C_V 0.12		
Temperature range [1]	14 to 428 °F (–10 to +220 °C) · With insulating section: –325 to + 842 °F (–196 to +450 °C)		
Leakage class According to IEC 60534-4 According to ANSI FCI 70-2	Metal seal: IV · High-performance metal seal: V		
Compliance	EAC		

[1] Higher temperatures on request

Table 2: *Materials*

Valve body [1] and valve bonnet [2]	A479 A316/316L	B 574 N06455
Seat	A479 A316/316L [3] 1.4122 Stellite®	B 574 N06455 [3]
Plug	A479 A316/316L [3] 1.4112 Stellite®	B 574 N06455 [3]
Packing	PTFE compound	
Body gasket	A479 A316/316L	B 574 N06455
Insulating section	A479 A316/316L	B 574 N06455
Metal bellows seal		
Intermediate piece	A479 A316/316L	B 574 N06455
Metal bellows up to Class 1500	1.4571	2.4819

[1] Other materials on request
[2] Wetted parts
[3] Only with C_V 0.0012 to 2

Table 3: *Available C_V coefficients*

Table 3.1: *Overview*

C_V coefficient		0.00012 to 0.0075 [1]	0.012 to 0.3	0.5	0.75 to 2.0 [2]
Rangeability		<15:1	15:1 to 50:1	50:1	
Seat Ø	mm	2	3	4	10
Seat thread [3]		M10 x 1			M16 x 1
Plug stem Ø	mm	4		4	
Rated travel	mm	7.5		7.5	

1) Seat and plug made only of 1.4122/1.4122, 1.4122/Stellite® or Stellite®/Stellite®
2) Only up to Class 600
3) Trims are only interchangeable within the C_V coefficient ranges C_V 0.00012 to 0.5 (M10x1) and C_V 0.75 to 2.0 (M16x1) due to the different seat threads.

Table 3.2: *C_V coefficients and associated valve sizes*

Connection			Female thread			Welding ends		Flanges		
Flow coefficient	Characteristic		G ⅛ G ¼ ⅛ NPT ¼ NPT Rc ⅛ Rc ¼	G ⅜ ⅜ NPT Rc ⅜	G ½ · G ¾ ½ NPT ¾ NPT Rc ½ Rc ¾	NPS ½	NPS 1	NPS ½	NPS ¾	NPS 1
C_V	Equal percentage	Linear								
0.00012	–	•	•	•	•	•	•	•	•	•
0.00020		•	•	•	•	•	•	•	•	•
0.00030		•	•	•	•	•	•	•	•	•
0.00050		•	•	•	•	•	•	•	•	•
0.00075		•	•	•	•	•	•	•	•	•
0.0012		•	•	•	•	•	•	•	•	•
0.0020		•	•	•	•	•	•	•	•	•
0.0030		•	•	•	•	•	•	•	•	•
0.0050		•	•	•	•	•	•	•	•	•
0.0075		•	•	•	•	•	•	•	•	•
0.012	•	•	•	•	•	•	•	•	•	•
0.020	•	•	•	•	•	•	•	•	•	•
0.030	•	•	•	•	•	•	•	•	•	•
0.050	•	•	•	•	•	•	•	•	•	•
0.075	•	•	•	•	•	•	•	•	•	•
0.12	•	•	•	•	•	•	•	•	•	•
0.20	•	•	•	•	•	•	•	•	•	•
0.30	•	•	•	•	•	•	•	•	•	•
0.50	•	•	•	•	•	•	•	•	•	•
0.75 [1]	•	•	–		•	•	•	•	•	•
1.2 [1]	•	•			•	•	•	•	•	•
2.0 [1]	•	•			•	•	•	•	•	•

1) Versions can be used up to Class 600 at the maximum

Table 3.3: *Valve selection guide*

Class	150 to 300			600			900 to 1500			2500		
Metal bellows	Optional			Optional			Optional			–	Optional	
C_V												
0.00012	Type 3510			Type 3510			Type 3510			Type 3510		
0.00020												
0.00030												
0.00050												
0.00075												
0.0012												
0.0020												
0.0030												
0.0050												
0.0075												
0.012												
0.020												
0.030												
0.050												
0.075												
0.12		Type 3252	Type 3241		Type 3252	Type 3251		Type 3252	Type 3251		Type 3252	Type 3251
0.20												
0.30												
0.50												
0.75												
1.2												
2.0												
3.0												
5.0												
7.5												
12												

Refer to the following data sheets for detailed information on the corresponding valves:

- Type 3241: ▶ T 8015 (DIN) and ▶ T 8012 (ANSI)
- Type 3251: ▶ T 8051 (DIN) and ▶ T 8052 (ANSI)
- Type 3252: ▶ T 8053

Table 4: *Permissible differential pressures · Pressures stated in bar (gauge)*

Table 4.1: *Standard version without bellows seal · Fail-close*

Bench range with actuator area		**120 cm²**	**0.4 to 0.8**	**0.8 to 1.6**	**1.7 to 2.1**	**2.4 to 3.1**
Valve size	C_V coefficient	Actuator	Δp when p_2 = 0 bar			
G/NPT/Rc ⅛ · ¼ · ⅜ · ½ · ¾ NPS ½ · ¾ · 1	0.00012 to 0.5	120 cm²	250	400	–	–
G/NPT/Rc ½ · ¾ NPS ½ · ¾ · 1	0.75 to 2.0 [1]	120 cm²	35	84	100	–

[1] Only up to Class 600

Table 4.2: *Standard version with bellows seal · Fail-close*

Bench range with actuator area		**120 cm²**	**0.4 to 0.8**	**0.8 to 1.6**	**1.7 to 2.1**	**2.4 to 3.1**
Valve size	C_V coefficient	Actuator	Δp when p_2 = 0 bar			
G/NPT/Rc ⅛ · ¼ · ⅜ · ½ · ¾ NPS ½ · ¾ · 1	0.00012 to 0.5	120 cm²	30	72	160	250
G/NPT/Rc ½ · ¾ NPS ½ · ¾ · 1	0.75 to 2.0 [1]	120 cm²	25	68	100	–

[1] Only up to Class 600

Table 4.3: *Standard version without bellows seal · Fail-open*

Bench range with actuator area		**120 cm²**	**0.4 to 0.8**		
		Supply pressure	1.2	2.5	3.5
Valve size	C_V coefficient	Actuator	Δp when p_2 = 0 bar		
G/NPT/Rc ⅛ · ¼ · ⅜ · ½ · ¾ NPS ½ · ¾ · 1	0.00012 to 0.5	120 cm²	254	400	–
G/NPT/Rc ½ · ¾ NPS ½ · ¾ · 1	0.75 to 2.0 [1]	120 cm²	36	100	–

[1] Only up to Class 600

Table 4.4: *Standard version with bellows seal · Fail-open*

Bench range with actuator area		**120 cm²**	**0.4 to 0.8**		
		Supply pressure	1.2	2.5	3.5
Valve size	C_V coefficient	Actuator	Δp when p_2 = 0 bar		
G/NPT/Rc ⅛ · ¼ · ⅜ · ½ · ¾ NPS ½ · ¾ · 1	0.00012 to 0.5	120 cm²	27	160	250
G/NPT/Rc ½ · ¾ NPS ½ · ¾ · 1	0.75 to 2.0 [1]	120 cm²	27	100	–

[1] Only up to Class 600

Table 5: *Permissible differential pressures · Pressures stated in psi (gauge)*

Table 5.1: *Standard version without bellows seal · Fail-close*

Bench range with actuator area		**120 cm²**	**6 to 12**	**12 to 23**	**25 to 30**	**35 to 45**
Valve size	C_V coefficient	Actuator	Δp when p_2 = 0 psi			
G/NPT/Rc ⅛ · ¼ · ⅜ · ½ · ¾ NPS ½ · ¾ · 1	0.00012 to 0.5	120 cm²	3675	5880	–	–
G/NPT/Rc ½ · ¾ NPS ½ · ¾ · 1	0.75 to 2.0 [1]	120 cm²	515	1235	1470	–

[1] Only up to Class 600

Table 5.2: *Standard version with bellows seal · Fail-close*

Bench range with actuator area		**120 cm²**	**6 to 12**	**12 to 23**	**25 to 30**	**35 to 45**
Valve size	C_V coefficient	Actuator	Δp when p_2 = 0 psi			
G/NPT/Rc ⅛ · ¼ · ⅜ · ½ · ¾ NPS ½ · ¾ · 1	0.00012 to 0.5	120 cm²	440	1060	2220	3705
G/NPT/Rc ½ · ¾ NPS ½ · ¾ · 1	0.75 to 2.0 [1]	120 cm²	365	1000	1470	–

[1] Only up to Class 600

Table 5.3: *Standard version without bellows seal · Fail-open*

Bench range with actuator area		**120 cm²**	**6 to 12**		
		Supply pressure	18	36	51
Valve size	C_V coefficient	Actuator	Δp when p_2 = 0 psi		
G/NPT/Rc ⅛ · ¼ · ⅜ · ½ · ¾ NPS ½ · ¾ · 1	0.00012 to 0.5	120 cm²	3735	5880	–
G/NPT/Rc ½ · ¾ NPS ½ · ¾ · 1	0.75 to 2.0 [1]	120 cm²	530	1470	–

[1] Only up to Class 600

Table 5.4: *Standard version with bellows seal · Fail-open*

Bench range with actuator area		**120 cm²**	**6 to 12**		
		Supply pressure	18	36	51
Valve size	C_V coefficient	Actuator	Δp when p_2 = 0 psi		
G/NPT/Rc ⅛ · ¼ · ⅜ · ½ · ¾ NPS ½ · ¾ · 1	0.00012 to 0.5	120 cm²	395	2220	3705
G/NPT/Rc ½ · ¾ NPS ½ · ¾ · 1	0.75 to 2.0 [1]	120 cm²	395	1470	–

[1] Only up to Class 600

Table 6: *Dimensions*

Table 6.1: *Dimensions for Type 3510 Valve*

Valve	Connection		Female thread	Welding ends		Flanges		
			G/NPT/Rc ⅛ to ¾	NPS ½	NPS 1	NPS ½	NPS ¾	NPS 1
L [1]	Class 150	in	2.91″ 74 mm	7.25	7.25	7.25	7.25	7.25
		mm		184	184	184	184	184
	Class 300	in		7.50	7.75	7.50	7.62	7.75
		mm		190	197	190	194	197
	Class 600	in		8.0	8.25	8.0	8.12	8.25
		mm		203	210	203	206	210
	Class 900/ Class 1500	in		8.50	10.0	8.50	9.0	10.0
		mm		216	254	216	229	254
	Class 2500	in		10.38	12.12	10.38	10.75	12.12
		mm		264	308	264	273	308
L1 [1]	Class 150	in	1.33″ 34 mm	3.62	3.62	3.62	3.62	3.62
		mm		92	92	92	92	92
	Class 300	in		3.75	3.88	3.75	3.81	3.88
		mm		95	99	95	97	99
	Class 600	in		4.00	4.12	4.00	4.06	4.12
		mm		101	105	101	103	105
	Class 900/ Class 1500	in		4.25	5.0	4.25	4.5	5.0
		mm		108	127	108	114	127
	Class 2500	in		5.19	6.06	5.19	5.38	6.06
		mm		132	154	132	137	154
H1	120 cm²	in	4.80					
		mm	122					
H4	Insulating section	Up to Class 2500	10.35″/263 mm					
	Bellows seal	Up to Class 600	10.35″/263 mm					
		Class 1500	14.37″/365 mm					
H2 or flange ØD1	Class 150	in	0.90″ [2] 23 mm [2]	0.90″ [2] 23 mm [2]	0.90″ [2] 23 mm [2]	3.54	3.94	4.33
		mm				90	100	110
	Class 300	in				3.74	4.53	4.91
		mm				95	115	125
	Class 600	in				3.74	4.53	4.91
		mm				95	115	125
	Class 900/ Class 1500	in				4.72	5.12	5.91
		mm				120	130	150
	Class 2500	in				5.31	5.51	6.30
		mm				135	140	160

[1] Face-to-face dimensions of flanges according to DIN EN 558

[2] H2 = 1.10″ or 28 mm when body is made of B 574 N06455

Table 6.2: *Type 3271 and Type 3277 Pneumatic Actuators*

Actuator area		cm²	120
Diaphragm ØD		in	6.61
		mm	168
H [1]		in	2.71
		mm	69
H3 [2]		in	4.33
		mm	110
H5	Type 3277	in	3.46
	Type 3277	mm	88
Thread	Type 3271		M30 x 1.5
	Type 3277		M30 x 1.5
a			G ⅛ (⅛ NPT)

[1] Minimum clearance required to remove the actuator

Table 7: *Weights in lbs and kg*

Table 7.1: *Weights for Type 3510 Valve*

Valve	Connection		Female thread	Welding ends	Flanges		
			G/NPT/Rc ⅛ to ¾	NPS ½. NPS 1	NPS ½	NPS ¾	NPS 1
Valve without actuator	Class 150	lbs	3.74	4.0	5.8	7.3	8.2
		kg	1.7	1.8	2.6	3.3	3.7
	Class 300	lbs	3.74	4.0	7.1	9.3	10.6
		kg	1.7	1.8	3.2	4.2	4.8
	Class 600	lbs	3.74	4.0	7.5	10.6	11.5
		kg	1.7	1.8	3.4	4.8	5.2
	Class 900/1500	lbs	3.74	4.0	14.4	16.8	19.2
		kg	1.7	1.8	5.2	7.6	8.7
	Class 2500	lbs			14.4	20	21.7
		kg			6.5	9.0	9.8
Optional	Insulating section	lbs	1.2				
		kg	0.5				
	Bellows seal	lbs	1.4				
		kg	0.6				

Table 7.2: *Type 3271 and Type 3277 Pneumatic Actuators*

Actuator		120 cm²
Weight. approx.	lbs	7.8
	kg	3.5

Dimensional drawings

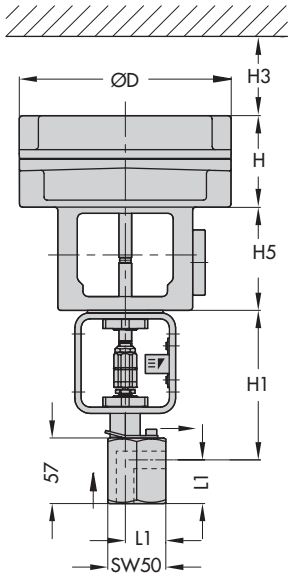

Type 3510-7 as angle valve with female thread

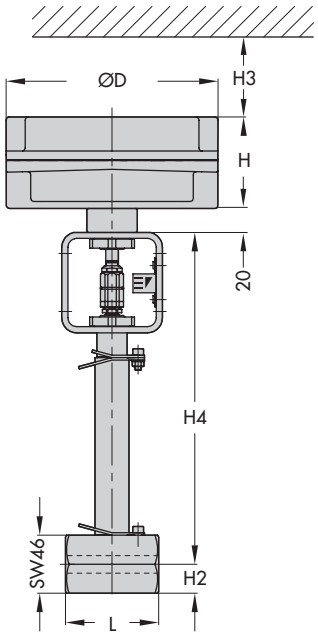

Type 3510-1 as globe valve with female thread, with bellows seal or insulating section

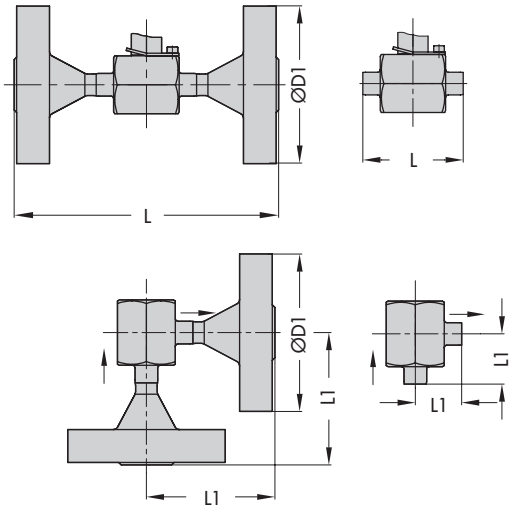

Type 3510 · Valve body with flanges and welding ends

Order specifications:

Type 3510 Micro-flow Valve	Globe or angle valve
Valve size	NPS
Pressure rating	Class
Body material	According to Table 2
Type of end connections	G, NPT or R_C female thread Flanges/welding ends
Direction of flow	Flow-to-open or flow-to-close
Characteristic	Equal percentage, linear or quick opening
Pneumatic actuator	Type 3271-5 or Type 3277-5, 120 cm² (see Data Sheet ▶ T 8310-1)
Fail-safe position	Fail-close or fail-open
Process medium	Density in kg/m³ and temperature in °C or °F
Flow rate	kg/h or m³/h in standard or operating state
Pressure	p_1 and p_2 in bar/psi (absolute pressure p_{abs}) (with minimum, normal and maximum flow rate
Valve accessories*	Positioner and/or limit switch

*Mounting kit (1400-9031) required

Note: The temperature limits for DIN and ANSI versions are not directly converted temperatures.

Specifications subject to change without notice

SAMSON AG · MESS- UND REGELTECHNIK
Weismüllerstraße 3 · 60314 Frankfurt am Main, Germany
Phone: +49 69 4009-0 · Fax: +49 69 4009-1507
samson@samson.de · www.samson.de

2016-12-20 · English