Type 3273 Hand-operated Actuator
Type 3273 Side-mounted Handwheel

Application

Hand-operated actuator or side-mounted handwheel for mounting on control valves, especially Series 240, 250, 260 [1], 280 and 290 Valves.

15 to 120 mm rated travel · Nominal thrusts up to 150 kN

General features

- Simple connection to the control valve
- Locking mechanism securing the valve stem position against accidental adjustment

Versions

– The **Type 3273 Hand-operated Actuator** (Fig. 1) is a spindle actuator equipped with a non-rising handwheel.

Special features

- Low overall height
- Replaceable with a pneumatic or electric actuator

Type 3273-1 · Handwheel diameter of 180 mm, max. thrust 18 kN.

Type 3273-2 · Handwheel diameter of 250 mm, max. thrust 32 kN.

Actuators for valves with rated travel higher than 30 mm and/or required thrusts over 30 kN upon request.

Combination with: see Table 3 to Table 5

– The **Type 3273 Side-mounted Handwheel** (Fig. 2) is a gear mounted between the valve and actuator.

Special features

- It can remain mounted on the valve while the actuator is being replaced or during maintenance work on the actuator.
- The fail-safe position of the valve is kept even when an actuator is not mounted on the valve.

Fig. 1: *Type 3273 Hand-operated Actuator mounted on Type 3241 Valve*

Fig. 2: *Type 3273 Side-mounted Handwheel*

[1] Type 3273 Hand-operated Actuator only

Principle of operation

– **Type 3273 Hand-operated Actuator** (Fig. 3)

The hand-operated actuator is connected to the valve bonnet by a nut (5). The stem connector (6) connects the threaded spindle (1) to the plug stem of the valve. The locking mechanism (4) locks the handwheel (3) and protects the valve stem position against accidental adjustment. Adjustment of the valve is only possible after releasing the locking mechanism (4).

– **Type 3273 Side-mounted Handwheel** (Fig. 4)

The worm shaft unit, consisting of the worm shaft (2) and worm-geared wheel (3), is driven over the handwheel. The spindle nut (4) transfers the rotary motion to the threaded spindle (5) which moves the valve. The gear is locked by the locking bolt (6) to prevent accidental adjustment.

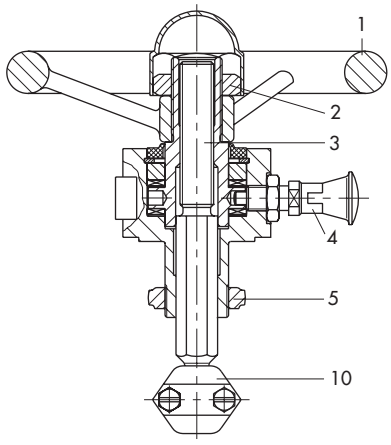

Fig. 3: *Sectional drawing of Type 3273 Hand-operated Actuator*

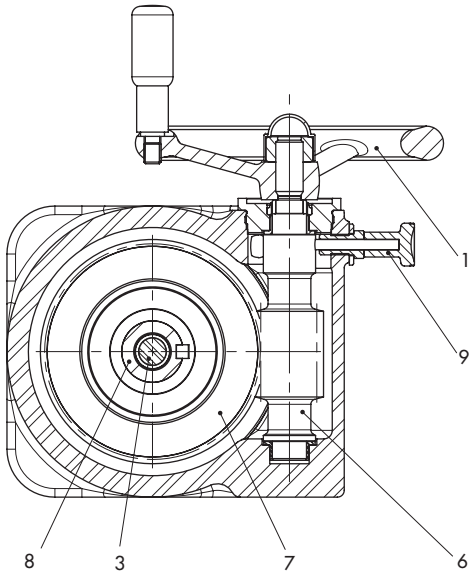

Fig. 4: *Sectional drawing of Type 3273 Side-mounted Handwheel, for up to 30 mm rated travel*

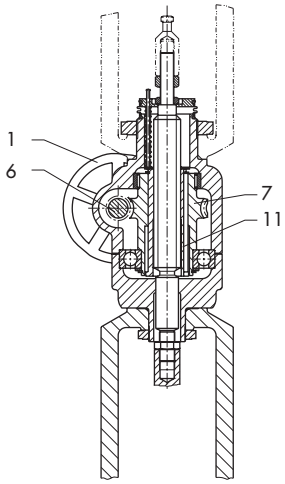

Fig. 5: *Sectional drawing of Type 3273 Side-mounted Handwheel, for up to 60 mm rated travel*

Legend

1	Handwheel	7	Worm-geared wheel
2	Threaded nut	8	Spindle nut
3	Threaded spindle	9	Locking bolt
4	Locking mechanism	10	Stem connector
5	Nut	11	Threaded bushing
6	Worm shaft		

Type 3273 Hand-operated Actuator

Table 1: *Technical data*

	Type	3273-1	3273-2
Rated travel	mm	15/30	
Max. travel	mm	23/38	
Max. thrust	kN	18	32
Req. manual force	N	230	300
Perm. temperature	°C	100	

Table 2: *Materials*

Spindle and threaded nut	Stainless steel 1.4104 or 1.4006
Body	St 37-2, powder coated
Handwheel	Aluminum

Assignment of handwheel and valves

Table 3: *Series 240*

Valve seat Ø in mm	Δp in bar		
	40	30	20
	Actuator		
≤ 12	On request		
24	3273-1		
31	3273-1		
38	3273-1		
48	3273-1		
63	3273-1		
80	3273-2	3273-1	
100	–	3273-2	
110	–	3273-2	
130	–	–	3273-2

Table 4: *Series 250 and 290*

Valve seat Ø in mm	Δp in bar			
	160	100	63	40
	Actuator			
≤ 12	On request			
24	3273-1			
31	3273-1			
38	3273-2	3273-1		
50	–	3273-2	3273-1	
63	–	–	3273-2	
80	–	–	–	3273-2
100	–	–	–	3273-2

Table 5: *Series 260*

Valve seat Ø in mm	Δp = 6 bar
	Actuator
15 to 65	3273-1
80	3273-1
100	3273-1
125	3273-1
150	3273-1

Spindle force versus manual force

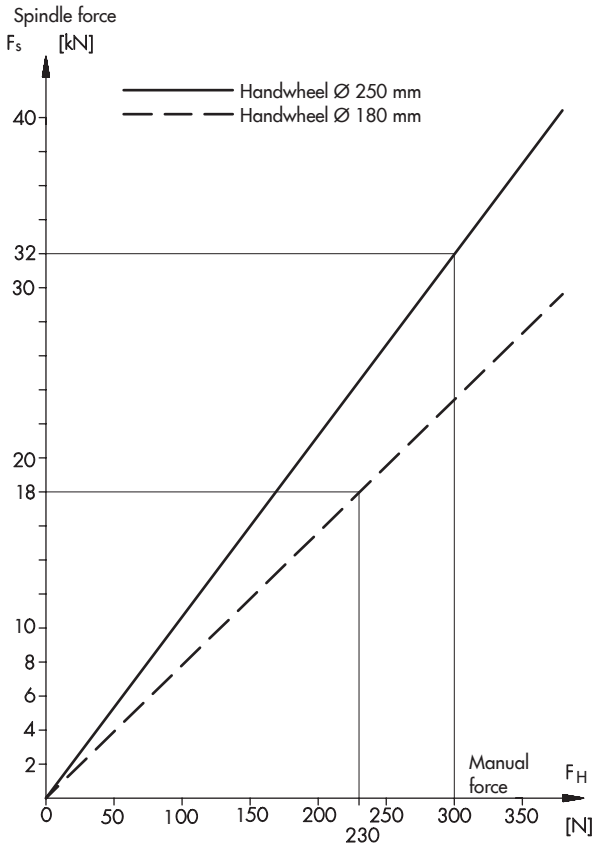

Dimensions and weights

Type	H1	H3 (valve CLOSED) Rated travel		H4	ØD1	ØD2	Ød	Weight kg (approx.)
		15 mm	30 mm					
3273-1	110	75	90	22	180	16	M30x1.5	2
3273-2	115	75	90	22	250	16	M30x1.5	2.5

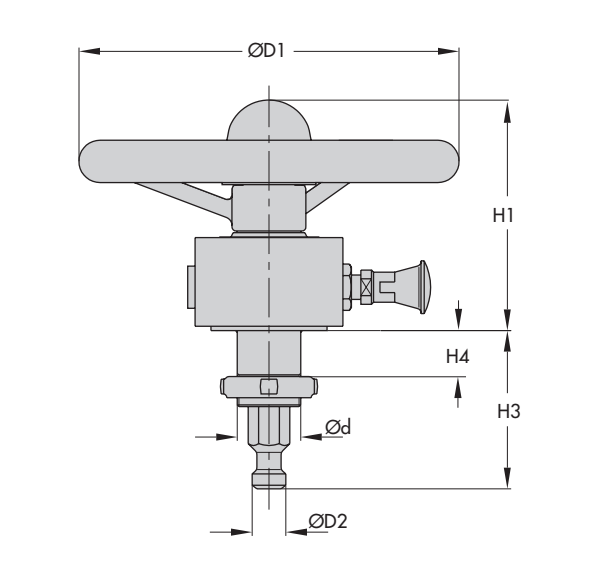

Type 3273 Side-mounted Handwheel for rated travels up to 30 mm

Table 6: *Technical data*

Type 3273	Version with connection Ø 30 mm	Ø 60 mm
For actuators with effective area cm²	175 · 240 · 350 · 355 · 700 · 750	1000 · 1400-60
Max. thrust	35 kN	50 kN
Rated travel	30 mm [1]	30 mm [1]
Maximum travel	38 mm	38 mm
Permissible ambient temperature	Body material 1.0619/A216 WCC: –29 to 120 °C Body material 1.5638/A352 LC3: –60 to 90 °C	
Operating forces	According to DIN EN 12570	
Number of turns	With 30 mm travel: 147 With 15 mm travel: 73.5	
Weight (gear only)	26 kg	37 kg

[1] For pneumatic actuators with spring compression between 25 and 125 %

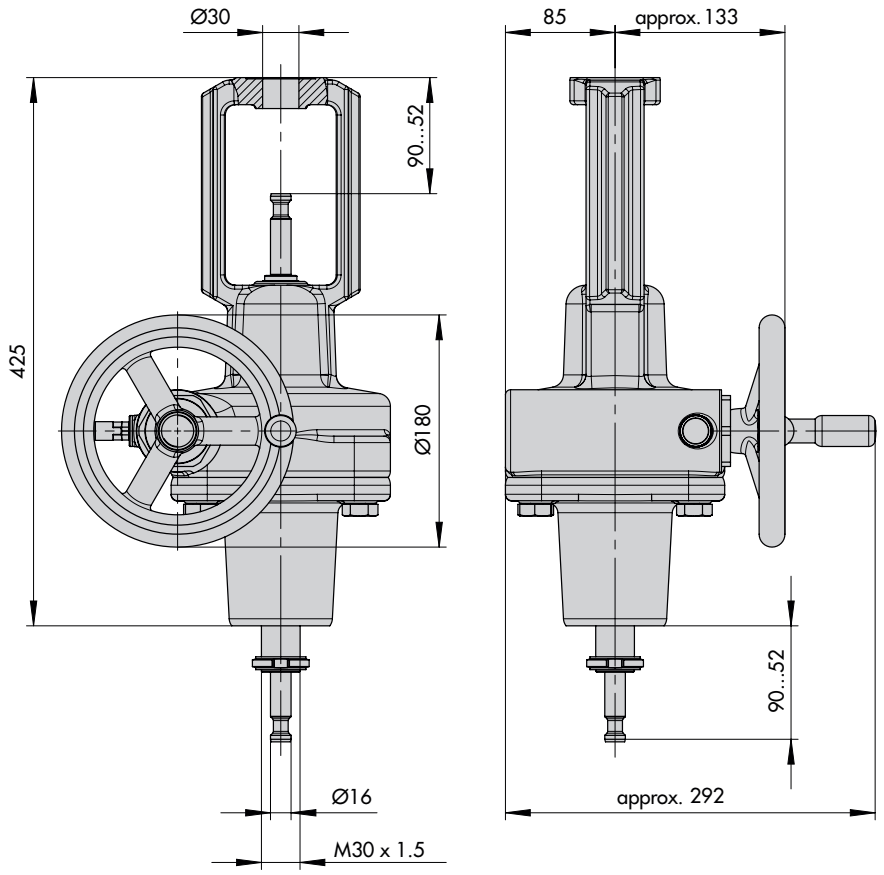

Fig. 6: *Type 3273 Side-mounted Handwheel for rated travels up to 30 mm, version with Ø 30 mm connection*

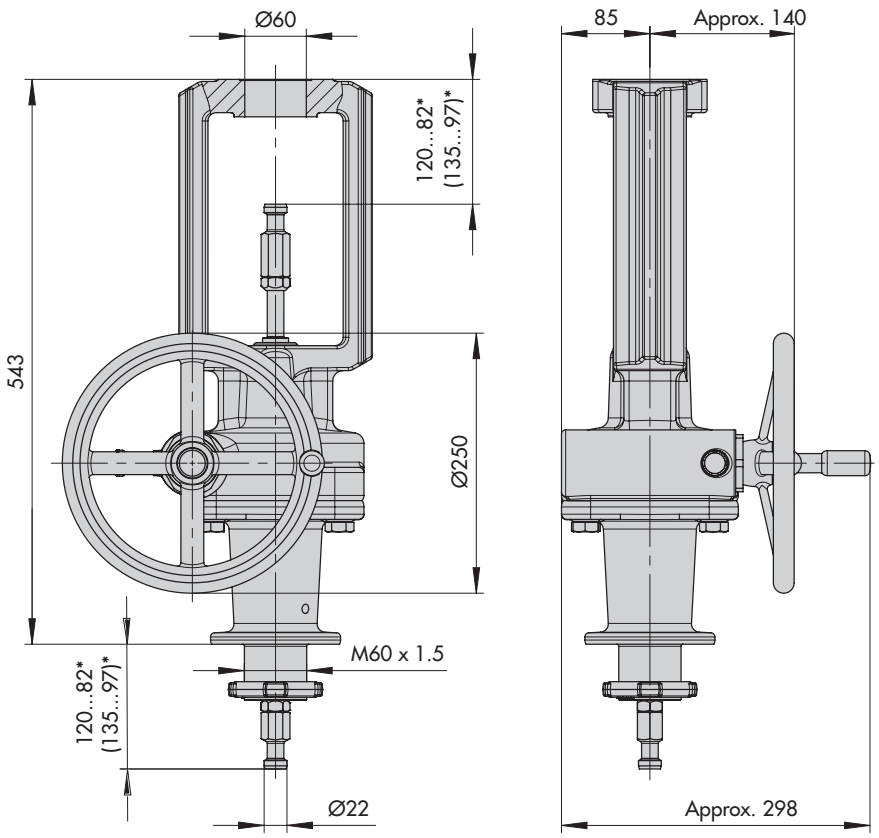

* For fail-safe action "stem retracts": Change over the top and bottom stem connector nuts

Fig. 7: *Type 3273 Side-mounted Handwheel for rated travels up to 30 mm, version with Ø 60 mm connection*

Type 3273 Side-mounted Handwheel for rated travels up to 60 mm

Table 7: *Technical data*

Version	**Type 3273 up to 60 mm rated travel**
Max. travel range	80 mm
Max. thrust	80 kN
Materials	
Body material and permissible ambient temperature	EN-JS1030 (GGG-40) · Spheroidal graphite iron · Max. 100 °C
	1.0619/A216 WCC · Painted cast steel · ≥ –29 °C 1.5638/A352 LC3 · Painted cast steel · ≥ –60 °C
Spindle and threaded nut	1.4104/G-CuSn12Pb
Handwheel	Aluminum

Table 8: *Dimensions and weights*

Valve	**DN**	**50 to 100**			**125 to 150**		
	NPS	**2 to 4**			**6**		
Seat bore	mm	≤ 100			≤ 150		
Travel	mm	Up to 30			Up to 60		
Actuator	cm²	1000 (1400-60)	1400-120	2800	1000 (1400-60)	1400-120	2800
H3	mm	932	1202		1055	1225	
H5	mm	295	480		418	503	
H9	mm	395	480		395	480	
Weight (kg)							
With actuator		180	300	575	184	303	578
Without actuator [1)]		70			70		

Valve	**DN**	**200 to 250**			**300 to 500**		
	NPS	**8 to 10**			**12 to 20**		
Seat bore	mm	≤ 200			≤ 200		
Travel	mm	Up to 60			Up to 60		
Actuator	cm²	1000 (1400-60)	1400-120	2800	1000 (1400-60)	1400-120	2800
H3	mm	1055	1225		1140	1225	
H5	mm	418	503		503	503	
H9	mm	395	480		395	480	
Weight (kg)							
With actuator		187	305	580	190	310	585
Without actuator [1)]		70			70		

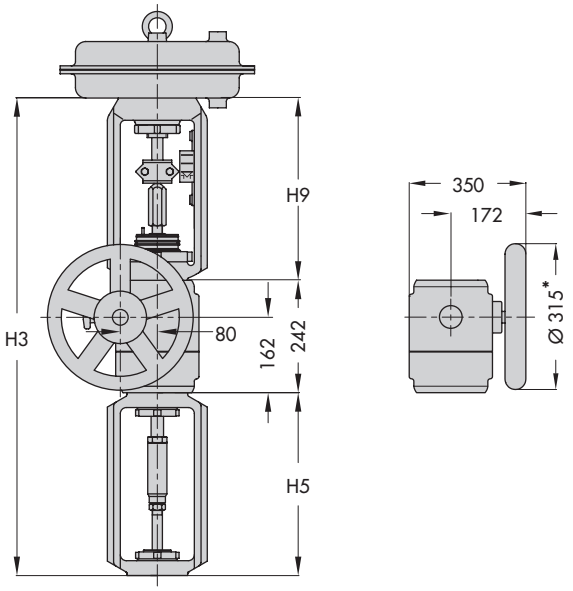

* Ø 500
for 1400-120 and 2800 cm² actuators

Fig. 8: *Type 3273 Side-mounted Handwheel for rated travels up to 60 mm*

Type 3273 Side-mounted Handwheel for rated travels up to 120 mm

Table 9: *Technical data*

Version	Type 3273 up to 120 mm rated travel
Max. travel range	160 mm
Max. thrust	150 kN
Materials	
Body material and permissible ambient temperature	EN-JS1030 (GGG-40) · Spheroidal graphite iron · Max. 100 °C
	1.0619/A216 WCC · Painted cast steel · ≥ –29 °C 1.5638/A352 LC3 · Painted cast steel · ≥ –60 °C
Spindle and threaded nut	EN-GJS-500-7 (GGG-50)/1.0503
Handwheel	EN-JL1040

Table 9.1: *Dimensions and weights*

Actuator	cm^2	1400-120	2800	2 x 2800
H10	mm	1105	1105	1105
H11	mm	220	220	220
Weight without actuator	kg	250	250	250

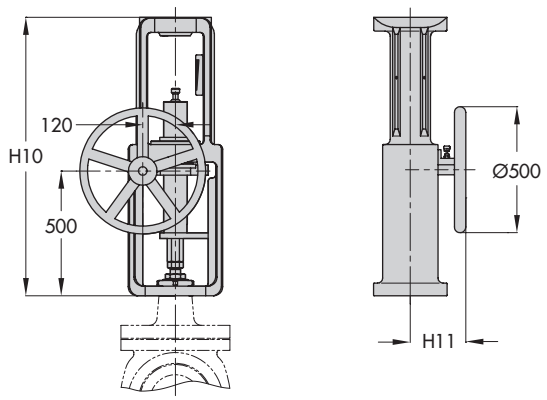

Fig. 9: *Type 3273 Side-mounted Handwheel for rated travels up to 120 mm (1400 and 2800 cm²)*

Ordering text for hand-operated actuator

- Type 3273-1/Type 3273-2
- For Type ... Valve, DN ..., PN. ..
- Seat bore ... mm, Δp ... bar

Ordering text for side-mounted handwheel

- For Type ... Valve, DN ..., PN ...
- Seat bore ... mm, Δp ... bar
- For rated travel ... mm
- Max. thrust ... kN
- Body material

Specifications subject to change without notice

SAMSON AG · MESS- UND REGELTECHNIK
Weismüllerstraße 3 · 60314 Frankfurt am Main, Germany
Phone: +49 69 4009-0 · Fax: +49 69 4009-1507
samson@samson.de · www.samson.de

2015-12-09 · English