Type 3374 Electric Actuator

Application

Electric actuator for plant engineering and HVAC

The actuator is a linear actuator with or without fail-safe action available either in a version with a three-step signal or a version with digital positioner. It can be combined with SAMSON Series V2001 and Series 240 Valves as well as Type 3260 and Type 3214 Valves.

Special features

- Actuator optionally available with either integrated yoke (Fig. 1) or using an M30 x 1.5 ring nut (Fig. 2) including the necessary stem connecting parts
- Actuator with fail-action "actuator stem extends" tested by the German Technical Inspectorate (TÜV) according to DIN EN 14597 in combination with various SAMSON valves
- Motor switched off by torque-dependent limit contacts
- Mechanical override [1)]
- Thrust up to 2.5 kN
- No maintenance required

Three-step version

- Power supply:
  - 230 V/24 V with 50/60 Hz or
  - 120 V/60 Hz
- Synchronous motor with maintenance-free planetary gear
- Additional electrical equipment:
  - Mechanical limit contacts
  - Resistance transmitters

Version with digital positioner

- Power supply:
  - 24 V with 47 to 63 Hz and DC
  - 85 to 264 V with 47 to 63 Hz
- Stepper motor with maintenance-free planetary gear
- All function settings performed using a rotary pushbutton on the actuator
- Backlit LCD
- Additional electrical equipment:
  - Mechanical limit contacts
  - Electronic limit contacts
  - RS-485 module for Modbus-RTU communication
- Settings performed in TROVIS-VIEW

1) Not in versions with positioner and fail-safe action

Fig. 1: *Type 3374-21 Electric Actuator, construction with integrated yoke*

Fig. 2: *Type 3374-15 Electric Actuator, construction for attachment using ring nut*

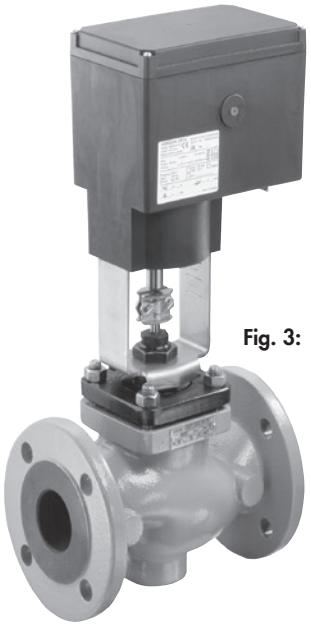

Fig. 3: *Type 3374-21 Electric Actuator, mounted on a V2001 Globe Valve*

Principle of operation

The electric actuator consists of a reversible motor and a maintenance-free planetary gear with ball screw drive. The motor is switched off by torque-dependent limit contacts or in case of overload.

Actuators with an integrated yoke (Fig. 5a) are primarily combined with the following valves:

- V2001
- Type 3260 in DN 65 to 150
- Type 3214 in DN 65 to 100
- Type 3214 balanced by a diaphragm, DN 125 to 250

Actuators with central attachment are primarily combined with valves that have their own yoke:

Series 240 (Fig. 5b)

- Type 3214 balanced by a bellows, DN 125 to 250 (Fig. 5c)

Fail-safe action

The Type 3374 Electric Actuator is available optionally with fail-safe action:

Actuator stem extends: Upon power supply failure, the actuator stem extends

Actuator stem retracts: Upon power supply failure, the actuator stem retracts

Additional electrical equipment

- **Mechanical limit contacts**
  The mechanical limit contacts can be adjusted independently from one another. They are actuated by continuously adjustable cam disks.
- **Electronic limit contacts**
  The electronic limit contacts consist of relays with changeover contacts. In contrast to the mechanical limit contacts, the electronic limit contacts no longer function after a power supply failure. The relays are de-energized and the contacts change to the idle state.
- **Resistance transmitters**
  The resistance transmitter is linked to the gear and produces a resistance signal between approx. 0 and 1000 Ω (usable range 0 to 800 Ω) proportional to the valve travel.

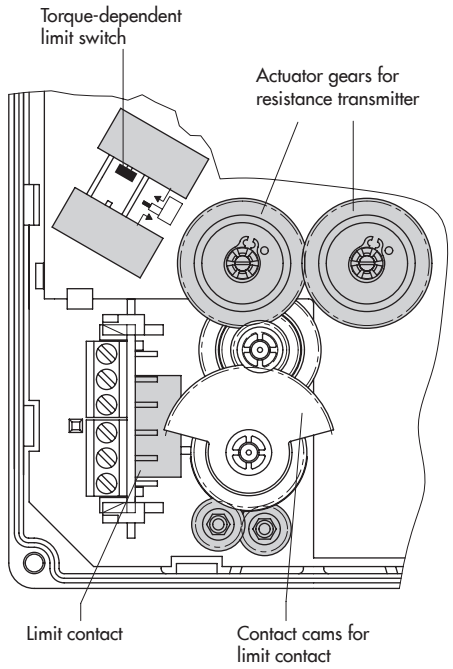

Fig. 4: *Partial view with opened cover*

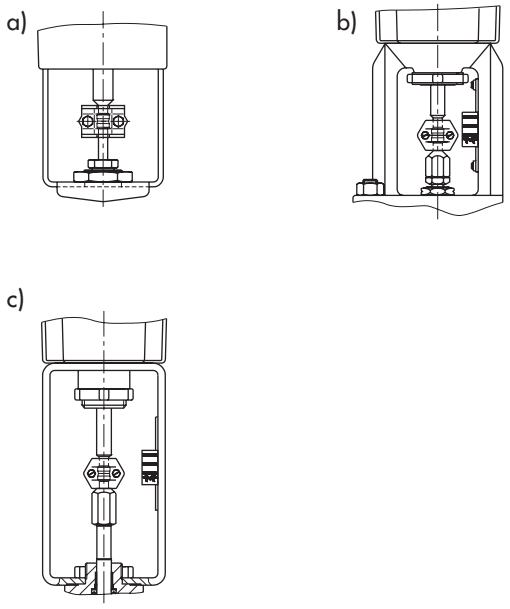

With integrated yoke for
a) Series V2001, Type 3260 (DN 65 to 150)
Type 3214 (DN 65 to 100)

With central attachment for
b) Series 240
c) Type 3214 (DN 125 to 250)
Series 240 (Type 3241 and Type 3244)

Fig. 5: *Attachment to various valves*

1. Three-step version

Table 1: *Technical data*

Type 3374		-10	-11	-15	-21	-26	-31	-36
Version with		Yoke		Ring nut	Yoke	Ring nut	Yoke	Ring nut
Fail-safe action		Without			Extends		Retracts	
Rated travel	mm	30	15	30	15			
Transit time for rated travel								
Standard	s	240	120	240	120			
Fast	s	120	60	120	60			
In the event of fail-safe action	s	–			12			
Stroking speed								
Standard	mm/s	0.125						
Fast	mm/s	0.25						
In the event of fail-safe action	mm/s	–			1.25			
Thrust	Retracts	2.5 kN			0.5 kN			
	Extends	2.5 kN			2 kN			
Power supply		230 V (+10/–15 %), 50 Hz 230 V (+10/–15 %), 60 Hz 24 V (+10/–15 %), 50 Hz 24 V (+10/–15 %), 60 Hz 120 V (90 to 132 V), 60 Hz						
Power consumption	VA	7.5/13 [2]			10.5/16 [2]			
Motor switch-off		Torque-dependent						
Degree of protection		IP 54 according to EN 60529, IP 65 with cable glands (can be retrofitted) [1] Suspended mounting not permitted						
Overvoltage category		II according to EN 60664						
Design and testing		According to EN 61010						
Class of protection		II according to EN 61140						
Noise immunity		According to EN 61000-6-2, EN 61326						
Noise emission		According to EN 61000-6-3, EN 61326						
Manual override		Hex wrench · Adjustment not possible after fail-safe action has been triggered.						
Weight	kg (approx.)	3.2		3.3	3.9	4.0	3.5	3.6
Materials		Housing and cover: Plastic (glass-fiber reinforced PPO)						
Additional electrical equipment								
Limit contacts		Two travel-dependent, adjustable changeover switches, max. 250 V AC, 1 A						
Resistance transmitters		0 to 1000 Ω, (0 to 900 Ω at rated travel) max. permissible current 1 mA						

[1] Cable glands M20 x 1.5 with metal nut SW 23/24 (order no. 1400-8828)
[2] Actuator with faster motor

2. Version with digital positioner

Table 2: *Technical data* · ***Without fail-safe action***

Type 3374		**-10**	**-11**	**-15**
Type of connection		With yoke		With ring nut
Travel	mm	30	15	30
Travel limitation		Between 10 and 100 % of the rated travel		
Manual override		4 mm hex wrench		
Electrical connection				
Power supply		24 V (±15 %), 47 to 63 Hz and 24 V DC (±15 %) 85 to 264 V, 47 to 63 Hz		
Power consumption		**Speed level: Normal · Fast**		
24 V	AC	12.5 VA · 16.5 VA		
	DC	7.5 W · 11 W		
85 to 264 V	AC	13.8 to 20 VA		
Transit time in s · Stroking speed in mm/s				
Standard version	Standard	120 · 0.25	60 · 0.25	120 · 0.25
	Fast	60 · 0.5	30 · 0.5	60 · 0.5
Actuator with faster motor	Standard	60 · 0.5	30 · 0.5	60 · 0.5
	Fast	30 · 1.0	15 · 1.0	30 · 1.0
Thrusts in kN (Standard version · Version with faster motor)				
Extends		2.5 · 1.25	2.5 · 1.25	2.5 · 1.25
Retracts		2.5 · 1.25	2.5 · 1.25	2.5 · 1.25
Weight				
	kg (approx.)	3.5	3.5	3.6

Table 3: *Technical data* · ***With fail-safe action***

Actuator	**Type 3374**	**-21**	**-26**	**-31**	**-36**
Type of connection		With yoke	With ring nut	With yoke	With ring nut
Fail-safe action		Extends		Retracts	
Travel	mm	15		15	
Travel limitation		Between 10 and 100 % of the rated travel			
Manual override		–			
Electrical connection					
Power supply		24 V (±15 %), 47 to 63 Hz and 24 V DC (±15 %) 85 to 264 V, 47 to 63 Hz			
Power consumption		**Speed level: Normal · Fast**			
24 V	AC	18 VA · 23 VA			
	DC	11.5 W ·15 W			
85 to 264 V	AC	19.8 to 26 VA			
Transit time in s · Stroking speed in mm/s					
Standard		60 · 0.25	60 · 0.25	60 · 0.25	60 · 0.25
Fast		30 · 0.5	30 · 0.5	30 · 0.5	30 · 0.5
Upon fail-safe action		12 · 1.25	12 · 1.25	12 · 1.25	12 · 1.25
Thrusts in kN					
Thrust (stem extends)		2	2	2	2
Thrust (stem retracts)		0.5	0.5	0.5	0.5
Nominal thrust of safety spring		2	2	0.5	0.5
Weight					
	kg (approx.)	4.2	4.3	3.8	3.9

Table 4: *Common technical data*

Type 3374-xx			
Input signal		Current input	0/4 to 20 mA, adjustable · R_i = 50 Ω
		Voltage input	0/2 to 10 V, adjustable · R_i = 20 kΩ
		Pt 1000 input	Measuring range: –50 to 150 °C, 300 µA
		Binary input	By bridging the terminals, not galvanically isolated
Position feedback	Current		0/4 to 20 mA, adjustable · Error message 24 mA
		Resolution	1000 steps or 0.02 mA
		Load	Max. 200 Ω
	Voltage		0/2 to 10 V, adjustable · Error message 12 V
		Resolution	1000 steps or 0.01 V
		Load	Minimum 5 kΩ
Binary input			Open-circuit voltage: 10 V; short-circuit current: 5 mA By bridging the terminals, not galvanically isolated
Binary output			Floating, max. 230 V AC/1 A
Applications	Positioner		The travel follows the input signal
	PID controller		Fixed set point control
	Two-step mode		Two-step behavior, control over binary input
	Three-step mode [1]		Three-step behavior, control over binary input
	Temperature closed-loop control upon input signal failure [1]		The integrated PID controller uses a fixed set point for closed-loop control when the input signal is missing.
Display			Icons for functions, codes and text field with backlight
Rotary pushbutton			Operating control for on-site operation to select and confirm codes and values
Interface		Standard	RS-232 · For point-to-point connection to communication participants or for memory pen · Permanently installed · Connection: RJ-12 connector socket
Motor switch-off			By torque-dependent limit contacts
Degree of protection acc. to EN 60529			IP 54 with cable entries, IP 65 with cable glands (can be retrofitted) [2] Suspended mounting not permitted according to EN 60664
Overvoltage category			II according to EN 61010
Design and testing			According to EN 61010
Class of protection			II according to EN 61140
EMC			According to EN 61000-6-2, EN 61000-6-3 and EN 61326
Degree of contamination			2 according to EN 61010
Noise immunity			According to EN 61000-6-2
Noise emission			According to EN 61000-6-3
Mechanical environmental conditions			Class 1M2 according to EN 60721-3-1:1998
			Class 2M1 according to EN 60721-3-2:1998
			Class 3M4 according to EN 60721-3-3:1998
			Class 4M4 according to EN 60721-3-4:1998
Permissible temperatures [3]	Ambient		5 to 60 °C
	Storage		–25 to +70 °C
Humidity			5 to 95 % relative humidity, no dew formation
Compliance			CE · EAC
Additional electrical equipment			
Limit contacts		Mechanical	Two adjustable limit contacts with changeover switches; 230 V AC/1 A · Without contact protection
		Electronic	Two adjustable limit contacts with relay and changeover switches; 230 V AC/1 A · Without contact protection
RS-485 module (order no. 1402-1522)			Module for Modbus-RTU communication

1) Application only available in Type 3374, revision 3
2) Cable glands M20 x 1.5 with metal nut SW 23/24 (order no. 1400-8828)
3) The permissible medium temperature depends on the valve on which the electric actuator is mounted. The limits in the valve documentation apply.

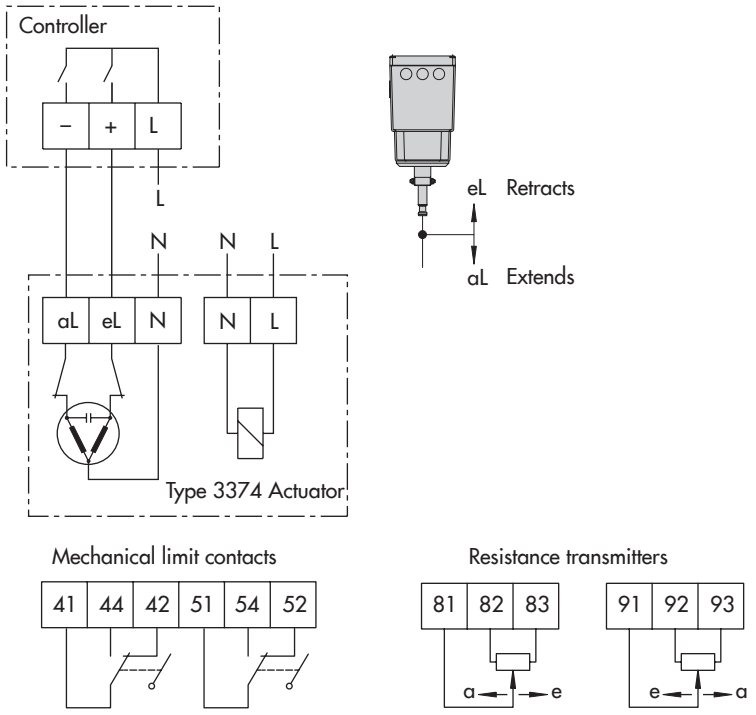

Fig. 6: *Electrical connection · Three-step version*

For actuators with firmware version 2.xx (revision 2)

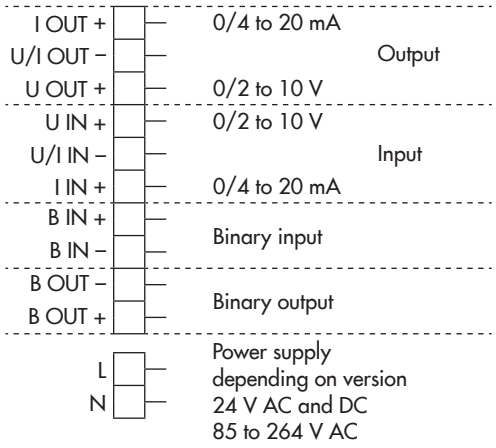

For actuators with firmware version 3.xx (revision 3)

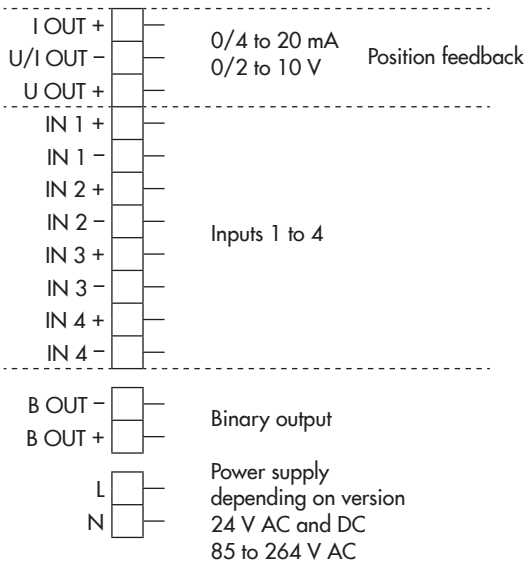

Mechanical limit contacts

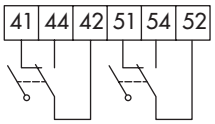

Electronic limit contacts

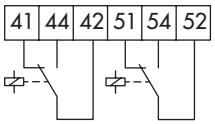

Depending on the selected application, connect the wires to the terminals as follows:

Positioner:

Input	Terminal
Current: 0/4 to 20 mA	IN 1 +/IN 1 –
Voltage: 0/2 to 10 V	IN 2 +/IN 2 –
Binary signal	IN 4 +/IN 4 –

PID Controller and Temperature closed-loop control upon input signal failure

Input	Terminal
Current: 0/4 to 20 mA	IN 1 +/IN 1 –
Voltage: 0/2 to 10 V	IN 2 +/IN 2 –
Pt 1000	IN 3 +/IN 3 –
Binary signal	IN 4 +/IN 4 –

Three-step mode:

Input	Terminal
Three step signal: Retracts: IN 2 +, IN 2 – ; Extends: IN 3 +, IN 3 –	
Binary signal	IN 4 +/IN 4 –

Two-step mode:

Input	Terminal
Open-closed	IN 2 +/IN 2 –
Binary signal	IN 4 +/IN 4 –

Fig. 7: *Electrical connection · Version with digital positioner*

Dimensions in mm

Type 3374-10/-11/-21/-31

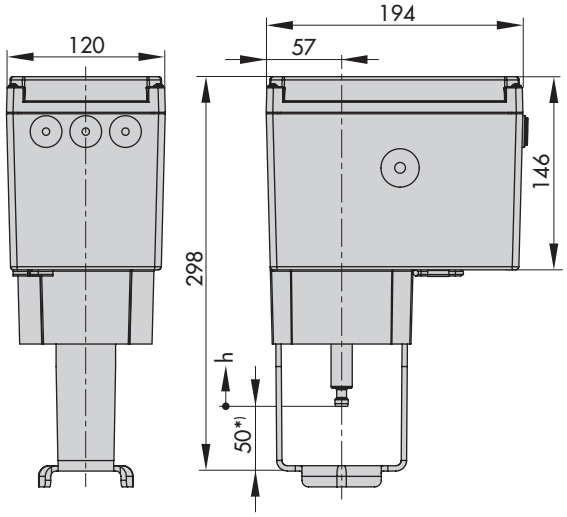

Types 3374-15/-26/-36

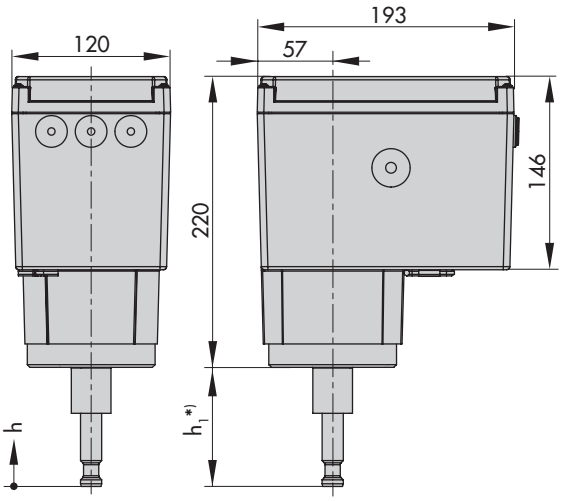

*) When actuator stem is fully extended

Type 3374	Dimension h	Dimension h_1
-10	30	–
-11	15	–
-21	15	–
-31	15	–
-15	30	90
-26	15	75
-36	15	75

Ordering text · Three-step version

Electric actuator	Type 3374- ...
Rated travel	15/30 mm
Version with fail-safe action	Actuator stem extends or retracts only with 15 mm travel
Power supply	230 V/50 or 60 Hz, 24 V/50 or 60 Hz or 120 V/60 Hz

Additional electrical equipment

Two mechanical limit contacts

Two resistance transmitters	0 to 1000 Ω

Ordering text · Version with digital positioner

Electric actuator	Type 3374- ...
Rated travel	15/30 mm
Version with fail-safe action	With/without
Gear version	Standard or actuator with faster motor
Power supply	24 V, 50/60 Hz and DC 85 to 264 V, 50/60 Hz

Additional electrical equipment

Two limit contacts	Mechanical/electronic

List of documentation

Mounting and operating instructions

- for Type 3374, revision 2: ▶ EB 8331-4 (rev. 2)
- for Type 3374, revision 3: ▶ EB 8331-4 (rev. 3)

Specifications subject to change without notice

SAMSON AG · MESS- UND REGELTECHNIK
Weismüllerstraße 3 · 60314 Frankfurt am Main, Germany
Phone: +49 69 4009-0 · Fax: +49 69 4009-1507
samson@samson.de · www.samson.de