Series 3755
Type 3755 Pneumatic Volume Booster

Application

The Type 3755 Volume Booster is used together with positioners to increase the positioning speed of pneumatic actuators with an effective area ≥ 1000 cm² or a travel volume ≥ 6 l.

K_{VS} for exhaust and supply **2.5 m³/h**
Pressure ratio: Signal to output **1:1**

The pneumatic volume booster is mounted between the positioner and actuator. It supplies the actuator with an air flow output whose pressure corresponds exactly to the signal pressure, except that it has a much higher volume output.

Special features

- Compact body made of cast aluminum
- Fast dynamic response due to low hysteresis
- Bypass restriction with linear characteristic
- Bypass restriction setting lead-sealable
- Sintered polyethylene filter disk ensures low noise emissions
- Constant reversing pressure
- Exhaust air feedback possible

Versions

– **Type 3755-1** (Fig. 1) · Pneumatic volume booster with low-noise sintered polyethylene filter disk
– **Type 3755-2** (Fig. 2) · Pneumatic volume booster with flanged-on threaded exhaust port (ISO 228 G 1 or 1-11½ NPT)

Fig. 1: *Type 3755-1, low-noise venting over a sintered polyethylene filter disk*

Fig. 2: *Type 3755-2: flanged-on threaded exhaust port*

Associated Information Sheet **T 8350** **Edition March 2014**

Data Sheet **T 8393 EN**

Principle of operation (Fig. 3)

If the positioner signal to supply air to the actuator increases, the pressure above the diaphragm (1) increases. The differential pressure at the diaphragm causes the supply plug (2) to open, providing supply air up to a maximum of 10 bar to the actuator.
In contrast, a positioner signal to vent the actuator causes the exhaust plug (3) to open. The pressure in the actuator is relieved over the exhaust port.

The bypass restriction screw (4) is used to adjust the response of the pneumatic volume booster to match the closed control loop requirements. The setting of the bypass restriction screw can be locked in position to prevent it from being turned and can additionally be lead-sealed.

Mounting on control valves

Mount the volume booster with the air flowing from the supply port to the actuator port in the direction indicated by the arrow on the body. The volume booster is mounted between the positioner and actuator.

Pneumatic connections

The air connections for signal, supply, actuator and for the version with flanged-on exhaust port are designed with G or NPT threads depending on the pipe female thread selected.

Connections and direction of flow:

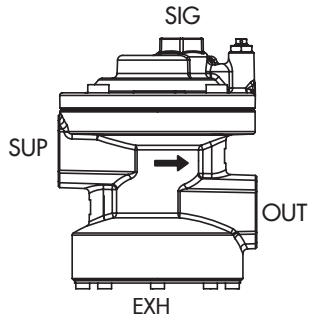

SIG	Signal
SUP	Supply air
OUT	Output (to actuator)
EXH	Exhaust air

Sectional drawing:

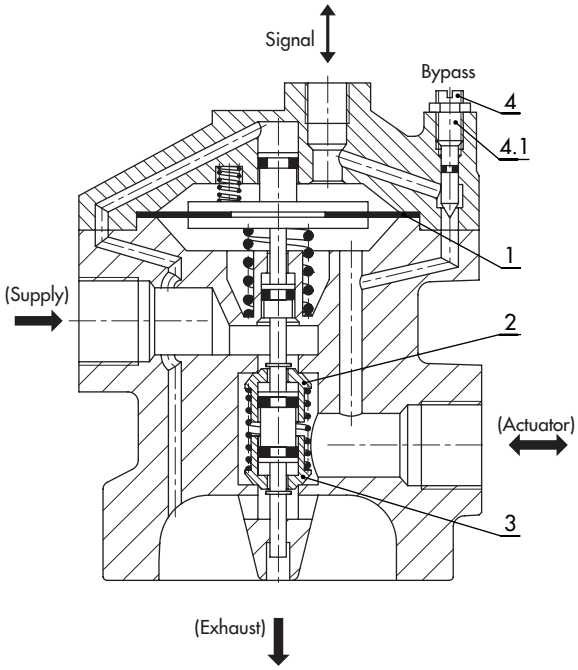

1	Diaphragm
2	Supply plug
3	Exhaust plug
4	Bypass restriction screw
4.1	Lock nut

Fig. 3: *Pneumatic connections and sectional drawing*

Technical data

Type	3755-1	3755-2
Flow coefficient		
K_{VS} Supply	2.5 m³/h	
K_{VS} Exhaust	2.5 m³/h	
K_{VS} Bypass	0.8 m³/h	
Closed loop control		
Pressure ratio	Signal:output = 1:1	
Pressure of response	Standard temperature range: 80 mbar · Low-temperature range: 100 mbar	
Pressure		
Supply	max. 10 bar · max 145 psi	
Actuator	max. 7 bar · max 101.5 psi	
Signal	max. 7 bar · max 101.5 psi	
Air quality acc. to ISO 8573-1	Max. particle size and density: Class 4 · Oil content: Class 3 · Pressure dew point: Class 3 or at least 10 K below the lowest ambient temperature to be expected	
Connecting thread		
Supply (SUP)	G ¾ (optionally ¾ NPT)	
Output (OUT)	G ¾ (optionally ¾ NPT)	
Signal (SIG)	G ¼ (optionally ¼ NPT)	
Flanged-on threaded exhaust port (EXH)	–	G 1 (optionally 1 NPT)
Safety integrity level		
Use in safety-instrumented systems acc. to IEC 61508/ SIL [2), 3)]	**Suitable for use in safety-instrumented systems up to SIL 2:** applies to a single device **Suitable for use in safety-instrumented systems up to SIL 3:** applies to redundant configuration according to IEC 61508	
Degree of protection according to EN 60529		
Degree of protection provided by enclosure	IP 44 [1)]	IP 66
Compliance	EAC	
Other operating parameters		
Permissible ambient temperature	Standard temperature range: –40 to +80 °C · Low-temperature range: –55 to +60 °C	
Service life	≥ 1 x 10^7 full strokes	
Weight	2.1 kg	2.4 kg
Materials		
Body	Cast aluminum, powder paint coated (RAL 1019)	
Exhaust side	Silencer with sintered polyethylene filter disk and stainless steel retaining plate	Flanged-on threaded port made of aluminum, powder paint coated (RAL 1019)
Diaphragm	Standard temperature range: VMQ · Low-temperature range: PVMQ	
Seat/plug seal	VMQ	
Other seals	NBR	
Other external parts	Stainless steel	

1) Exhaust side facing downward or to the side
2) According to Manufacturer's Declaration HE 1193
3) Only suitable for standard temperature range

Ordering text

Pneumatic volume booster	Type 3755
Version	Noise-reduced venting or flanged-on threaded exhaust port
Pneumatic connections	G/NPT
Exhaust port	Silencer/flanged-on threaded exhaust port
Body material	Aluminum
Color	Gray-beige, structured finish, RAL 1019

Dimensions in mm

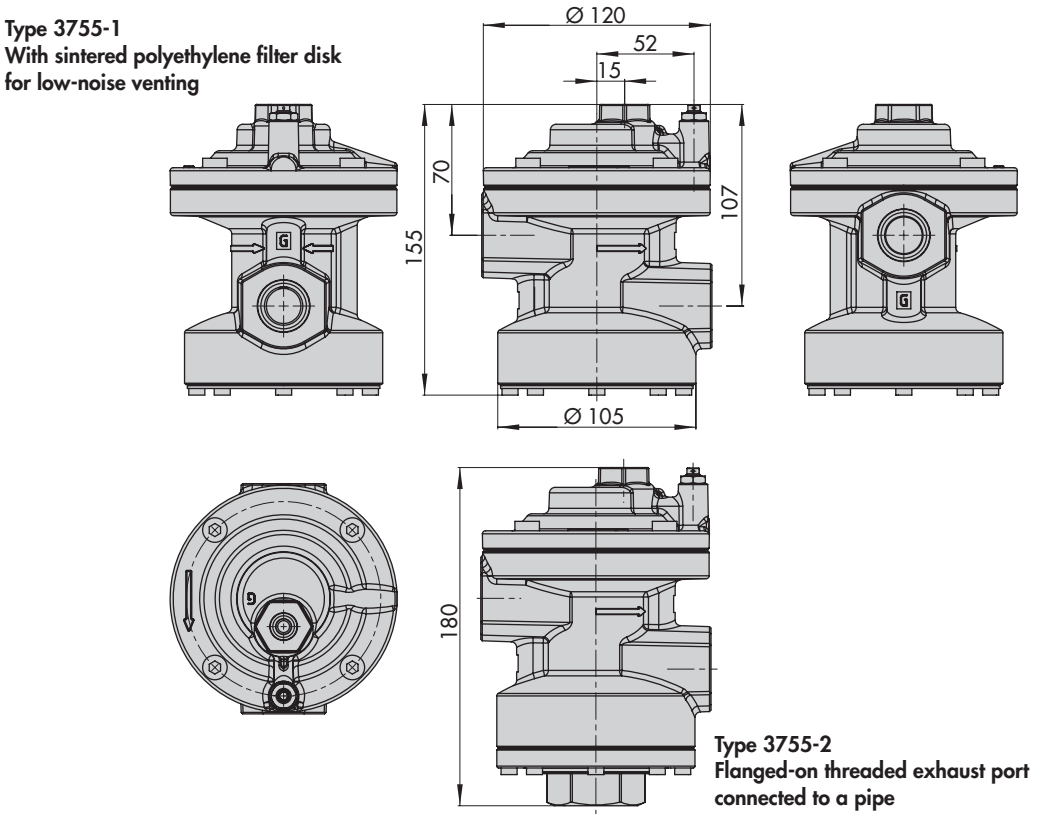

Article code

Pneumatic Volume Booster Type 3755-	x	x	x	0	0	x	x	0	0	x	0	0	0	0
Version														
Standard, low-noise venting over a sintered polyethylene filter disk	1		0											
Flanged-on threaded exhaust port	2		3/5											
Pneumatic connections														
Standard: supply air and actuator ISO 228 - G ¾, signal ISO 228 - G ¼		1												
Supply air and actuator ¾-14 NPT, signal ¼-18 NPT		2												
Exhaust port														
Standard: sintered polyethylene filter disk			0											
Flanged-on threaded exhaust port ISO 228 - G 1			3											
Flanged-on threaded exhaust port 1-11 ½ NPT			5											
Flow coefficient														
Standard: supply air K_{VS} = 2.5 m^3/h, exhaust K_{VS} = 2.5 m^3/h				0										
Dynamic response														
Standard (normal control)					0									
Body material														
Aluminum (standard)						0								
Color														
Standard: Gray-beige, RAL 1019, structured finish							0							
Temperature range														
Standard: –40 to +80 °C										0				
Low temperature version, –55 to +60 °C										1				

Specifications subject to change without notice

SAMSON AG · MESS- UND REGELTECHNIK
Weismüllerstraße 3 · 60314 Frankfurt am Main, Germany
Phone: +49 69 4009-0 · Fax: +49 69 4009-1507
samson@samson.de · www.samson.de

2015-11-23 · English