Series W&T

Pneumatic Control Valve Type RVG Flange
Globe valve and angle valve

Application

Control valve for high industrial requirements in process engineering applications involving feedwater and steam

Nominal size	**DN 50 to 150 · NPS 2 to 6**	
Nominal pressure	**PN 40 to 400 · Class 300 to 2500**	

Type RVG Flange Globe Valve with

- Type 3271 Pneumatic Actuator as W&T Type RVG-1

Valve body made of

- Carbon steel 1.0619/A 216 WCC
- High-temperature carbon steel 1.7357/A 217 WC6

Versions

– **Type RVG Flange** · Standard version with flanged, globe-style body with single-stage perforated cage and clamped seat ring

Further versions

– Electric actuators
– Pressure-balanced plugs
– Two-stage or three-stage perforated cages/plugs
– 4-stage to 10-stage plugs on request
– Angle valves
– Valves with welding ends as Type RVG, see T 9933 EN

Application limits for multi-stage plugs

– $\Delta p <$ 50 bar / 725 psi - single-stage plug
– $\Delta p <$ 100 bar / 1450 psi - two-stage plug
– $\Delta p <$ 150 bar / 2175 psi - three-stage plug

Fig. 1 · Type RVG Flange Globe Valve

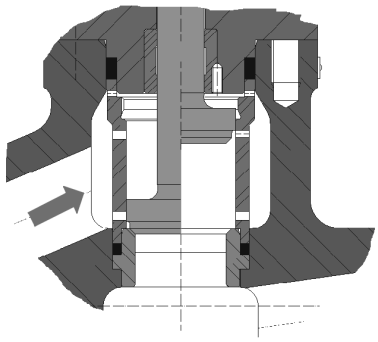

Fig. 2 · Single-stage perforated cage

Associated Information Sheets	**T 8000-1/-2/-3 EN**
Actuators up to 700 cm²	**T 8310-1 EN**
Actuator larger than 700 cm²	**T 8310-2 EN**

Edition February 2008

Data Sheet **T 9933-1 EN**

Principle of operation

The process medium flows through the valve in the direction indicated by the arrow. The cross-sectional area of flow across the perforated cage is determined by the edge of the valve plug. The arrangement and size of the bores in the perforated cage determine the valve characteristic and the flow coefficient.

With two-stage plugs, the pressure is further reduced by a downstream perforated plug.

In valves with three-stage plugs (only for liquids), an additional stage is located downstream of the seat ring.

Fail-safe action

Depending on how the compression springs are arranged in the actuator (for details refer to Data Sheets T 8310-1 EN and T 8310-2 EN), the control valve provides two fail-safe actions that become effective when the supply air fails.

Actuator stem extends (FA):
the valve is closed when the supply air fails.

Actuator stem retracts (FE):
the valve is opened when the supply air fails.

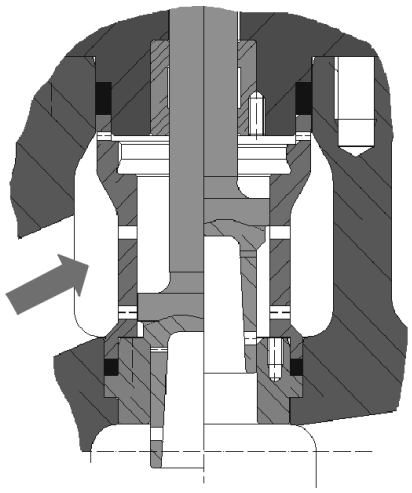

Fig. 3 · Two-stage plug

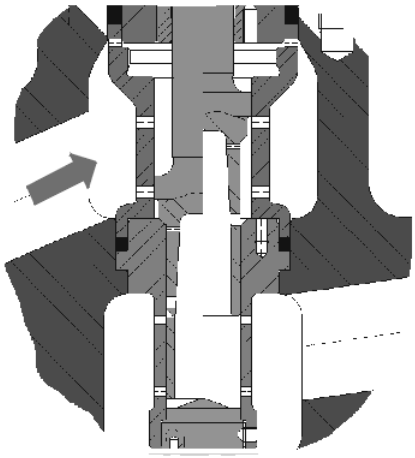

Fig. 4 · Three-stage plug

Fig. 5 · Type RVG Flange in angle-body version

Table 1 · Technical data

Material		1.0619 · A 216 WCC	1.7356 · A 217 WC6
Nominal size		DN 50 … 150 · NPS 2 … 6	
Nominal pressure		PN 40 … 400 [1] · ANSI Class 300 … 2500 [1]	
Connection	Flanges	All DIN and ANSI flanges	
	Welding ends	See T 9933 EN - Type RVG	
Seat-plug seal		Metal sealing	
Characteristic		Equal percentage · Linear	
Throttling element		Perforated plug, single-stage to three-stage	
Rangeability		1 : 30 (higher rangeabilities on request)	
Temperature range	PTFE	≤ 260 °C · ≤ 500 °F	
	Graphite	> 260 °C · > 500 °F	
Leakage class according to EN 1349			
Valve plug	Metal sealing	V	
	Pressure balancing	IV	

[1] Nominal pressures up to PN 400/ANSI Class 2500 on request

Table 2 · Materials

Valve body	1.0619 · A 216 WCC	1.7356 · A 217 WC6
Nominal pressure	PN 40 … 400 · ANSI Class 300 … 2500	
Valve bonnet	1.0460 (C22.8) · 1.0619 · A 216 WCC	1.7335 (13CrMo44) · A 182 F11
Seat and plug	1.4122	
Guide bushing	1.4112	
Packing	Graphite	
Body gasket	Graphite with metal core (1.4541)	

Table 3 · Available K_{VS} and C_V coefficients

Table 3a · Globe or angle valve with single-stage plug

K_{VS}		4.1	6.9	10.5	25	36	53	66	120	130	142	165	183
C_V		4.7	8.0	12.1	28.9	41.6	61.3	76.3	138.7	150.3	164.1	190.8	211.6
Flow cross-section (cm^2)		1.4	2.4	3.8	10	15.7	22.6	28	50	56.7	62	72	80
Seat ∅ (mm)		20	25	32	40	50	65	80	80	90	100	110	120
Travel (mm)		25		35		50			75				
DN	NPS												
50	2	•	•	•									
65	–				•	•	•						
80	3				•	•	•						
100	4					•	•	•					
150	6								•	•	•	•	•

Table 3b · Globe or angle valve with two-stage plug
Reduced K_{VS}/C_V coefficients apply for vapor applications.

K_{VS}		2.9	5.2	7.5	13	22	34	41	54	76	92	111	128
C_V		3.4	6.0	8.7	15.0	25.4	39.3	47.4	62.4	87.9	106.4	128.3	148
Flow cross-section (cm²)		1.4	2.4	3.6	6.2	10.6	17.7	22.5	29.6	38.6	48.9	58	70
Seat ∅ (mm)		20	25	32	40	50	65	80	80	90	100	110	120
Travel (mm)		25		35		50			75				
DN	NPS												
50	2	•	•	•									
65	–				•	•	•						
80	3				•	•	•						
100	4					•	•	•					
150	6								•	•	•	•	•

Table 3c · Globe valve with three-stage plug

K_{VS}		2.9	5.2	6.5	7.5	9.5	14.5	16.5	22	37.5	43	58	75	80
C_V		3.4	6.0	7.5	8.7	11.0	16.8	19.1	25.4	43.4	49.7	67.1	86.7	92.5
Flow cross-section (cm²)		1.4	2.4	3	3.5	4.5	7	8	10.5	20.7	23.6	32	38	42.5
Seat ∅ (mm)		20	25	32	40	50	65	50	65	80	90	100	110	120
Travel (mm)		25						35		50				
DN	NPS													
50	2	•	•	•										
65	–				•	•	•							
80	3				•	•	•							
100	4							•	•					
150	6									•	•	•	•	•

Table 4 · Parameters for flow rate and noise level calculation

Travel [%]	10	20	30	40	50	60	70	80	90	100
F_L	0.964	0.95	0.938	0.927	0.918	0.911	0.906	0.901	0.899	0.898
x_{Fz}	0.45	0.44	0.44	0.43	0.41	0.41	0.41	0.41	0.40	0.40

Table 5 · Permissible differential pressures

Note! Required supply pressure p_{supply} = 4 bar · Differential pressure Δp at p_2 = 0 bar · Actuators marked E require the use of pressure-balanced valve plugs · Actuator sizing on request

Bench range [bar] for actuator [cm²]		350 cm² (0.6 … 3.0 bar)				700 cm² (0.6 … 3.0 bar)				1400 cm² (0.5…2.5 bar/1.3…2.8 bar)							
		Δp at p_2 = 0 bar															
p_1 in bar		10	20	30	40	50	60	70	80	90	100	110	120	130	140	150	160
DN	Seat ∅	Actuator size in cm²															
See Table 3a to Table 3f	20	350												700 E			
	25	–															
	32	700				1400											
	40																
	50																
	65																
	80																
	90									1400 E							
	100	–															
	110																
	120																

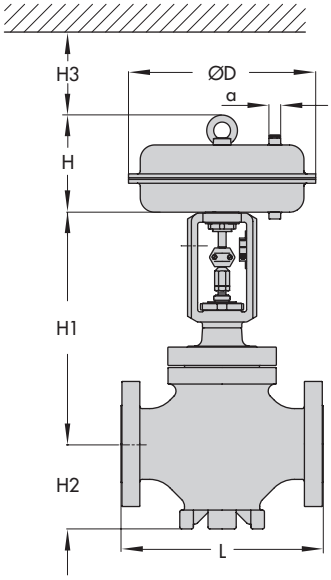

W&T Type RVG-1

Fig. 6 · Dimensional drawing of W&T Type RVG Flange Globe Valve

Table 6 · Dimensions and weights for W&T Type RVG Flange · Globe valve in standard version

Table 6a · Globe valve · DIN version

Valve	DN	50	80	100	150
Length L	PN 10…40	230	310	350	480
	PN 63…160	300	380	430	550
H1 for actuator [cm²]	350	457	462	482	–
	700	457	462	482	732
	1400	512	517	537	732
	2800	–		722	817
H2	PN 10…40	90	100	160	220
	PN 63...160	100	120	180	235
Weight in kg					
Valve without actuator	PN 16...40	38	59	78	201
	PN 63...160	54	89	116	334

Table 6b · Globe valve · ANSI version

Valve			NPS	2	3	4	6
Length L		Class 300	mm	267	318	368	473
			in	10.52	12.52	14.49	18.62
		Class 600	mm	286	337	394	508
			in	11.26	13.26	15.51	20
		Class 900	mm	368	381	457	609
			in	14.49	15	17.99	23.97
H1 for actuator [cm²]	350	Cl. 300/600	mm	457	462	482	–
			in	17.99	18.19	18.97	
		Cl. 900	mm	491	462	482	
			in	19.33	18.19	18.97	
	700	Cl. 300/600	mm	457	462	482	732
			in	17.99	18.19	18.97	29.01
		Cl. 900	mm	491	462	482	732
			in	19.33	18.19	18.97	29.01
	1400	Cl. 300/600	mm	512	517	537	732
			in	20.16	20.35	21.14	29.01
		Cl. 900	mm	546	517	537	732
			in	21.49	20.35	21.14	29.01
	2800	Cl. 300/600	mm	–		722	817
			in			28.42	32.16
		Cl. 900	mm			722	817
			in			28.42	32.16
H2		Cl. 300/600	mm	100	120	180	235
			in	3.93	4.72	7.02	9.25
		Cl. 900	mm	110	120	180	235
			in	4.33	4.72	7.08	9.25
Weight							
Valve without actuator		Cl. 300	kg	38	59	78	201
			lbs	83.8	130	172	443
		Cl. 600	kg	64	102	137	340
			lbs	141	225	302	750
		Cl. 900	kg	97	120	160	380
			lbs	214	265	353	838

See Table 8 for dimensions for actuators

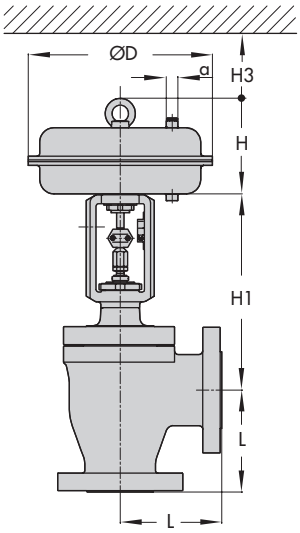

W&T Type RVG-1

Fig. 7 · W&T Type RVG Flange Angle Valve

Table 7 · Dimensions and weights for W&T Type RVG Flange · Angle valve in standard version

Table 7a · Angle valve · DIN version

Valve	DN	50	80	100	150
Length L	PN 10…40	125	155	175	225
	PN 63…160	150	190	215	275
H1 for actuator [cm²]	350	415	400	410	–
	700	415	400	410	628
	1400	470	455	465	628
	2800	655	640	650	713
Weight in kg					
Valve without actuator	PN 16...40	35	58	75	190
	PN 63...160	58	92	125	300

Table 7b · Angle valve · ANSI version

Valve	NPS		2	3	4	6
Length L	Cl. 300	mm	133	159	184	236
		in	5.23	6.26	7.24	9.29
	Cl. 600	mm	143	168	197	254
		in	5.63	6.6	7.75	10
	Cl. 900	mm	184	190	228	305
		in	7.24	7.48	8.97	12

Valve			NPS	2	3	4	6
H1 for actuator [cm²]	350	Cl. 300 /600	mm	415	400	410	–
			in	16.34	15.75	16.14	
		Cl. 900	mm	461	400	410	
			in	18.15	15.75	16.14	
	700	Cl. 300 /600	mm	415	400	410	628
			in	16.34	15.75	16.14	24.72
		Cl. 900	mm	461	400	410	628
			in	18.15	15.75	16.14	24.72
	1400	Cl. 300 /600	mm	470	455	465	628
			in	18.5	17.9	18.3	24.72
		Cl. 900	mm	516	455	465	628
			in	20.3	17.9	18.3	24.72
	2800	Cl. 300 /600	mm	–		650	713
			in			25.6	28.1
		Cl. 900	mm			650	713
			in			25.6	28.1
Weight in kg							
Valve without actuator		Cl. 300	kg	35	58	75	190
			lbs	77	128	165	419
		Cl. 600	kg	58	92	On request	
			lbs	128	203		
		Cl. 900	kg	91	110		
			lbs	200	242		

Table 8 · Dimensions and weights for Types 3271 Pneumatic Actuator

Actuator		cm²	350	700	1400	2800	2 x 2800
Diaphragm ∅ D		mm	280	390	530	770	
		in	11.02	15.35	20.86	30.0	
H (700 cm² and larger including lifting ring)		mm	82	200	287	620	1130
		in	3.23	7.87	11.3	24.41	44.49
H3 (min. clearance for actuator disassembly)		mm	110	190	610	650	
		in	4.33	7.48	24	25.6	
Thread			M30 x 1.5		M60 x 1.5	M100 x 2	
a (for Type 3271 Actuator)			G 3/8 (3/8 NPT)		G ¾ (¾ NPT)	G 1 (1 NPT)	
Weight							
Type 3271	Without handwheel	kg	8	22	70	450	950
		lbs	17.6	48.5	154.5	992	2095
	With handwheel	kg	13	27	Only with side-mounted handwheel, see T 8310-2 EN		
		lbs	28.7	59.5			

Ordering text

Valve Type RVG	Globe valve or angle valve
Nominal size	DN / NPS
Nominal pressure	PN / ANSI Class
Body material	According to Table 2
Plug version	Standard or pressure-balanced single-stage to three-stage
Characteristic	Equal percentage or linear
Actuator	Type 3271 (see T 8310-1 EN or T 8310-2 EN)
Fail-safe action	Valve CLOSED or valve OPEN
Process medium	Density and temperature
Flow rate	During operation
Pressure	p_1 and p_2 in bar/psi (absolute pressure p_{abs}), each at minimum, standard, and maximum flow rate
Accessories	Positioner and/or limit switch

Specifications subject to change without notice.

SAMSON AG · MESS- UND REGELTECHNIK
Weismüllerstraße 3 · 60314 Frankfurt am Main · Germany
Phone: +49 69 4009-0 · Fax: +49 69 4009-1507
Internet: http://www.samson.de

2008-03