# Series 3250

# Multi-Stage Globe Control Valve Type 3255

# Pneumatic Control Valves Type 3255/3271 and Type 3255/3277

## Application

Control valve for process engineering applications for low-noise and low-wear service with high industrial requirements.
**Nominal sizes 2" to 16" (50 to 400 mm)**
**Pressure ratings ANSI Class 150 to 2500**
**Temperatures –328 to +932 °F (–200 to +500 °C)**
**These valves comply with ANSI, ASME and ASTM standards**

The control valves consist of a body with multi-stage trim, bonnet, yoke and a pneumatic actuator, with optional metal bellows or insulating extension. The valves may also be equipped with electric, electrohydraulic, or hand-operated actuators, as well as control accessories and other instrumentation.

### Features

- Modular design, rugged and heavy duty construction, full range of body and trim materials
- Plug available with 3 or 5 stages, depending on service
- Bottom stem guided for additonal stability
- Field retrofittable metal bellows seals and extension bonnets
- Self-adjusting, live-loaded PTFE/Carbon V-ring stuffing box
- Excellent dynamic response and high trim stability
- Low profile, reversible, multi-spring/rolling diaphragm actuator
- NAMUR (IEC 534-6) accessory mounting standard
- Complete selection of actuator options, positioners and control accessories

### Standard Versions

- **Body materials** · ASTM Cast A 216 WCB, A 217 WC6, A 351 CF8M
- **End connections** · Raised-Face Flanges
- **Packing** · PTFE/Carbon V-ring spring-loaded/self-adjusting, temperature range: 15 to 430 °F (–10 to 220 °C)
- **Trim** · Equal percentage characteristic, metal-to-metal seal

### Options

- **Body Materials** · A 217 WC9, A 352 LCB, A 351 CF8, Hastelloy C, Monel, and others
- **Packing** · Adjustable, high-temperature (HT) packing for temperatures from 15 to 660 °F (–10 to 350 °C) and others
- **Extension Bonnet** · For extreme temperatures from -328 to 932 °F (–200 to 500 °C)
- **Metal bellows seal** · For complete seal between process and atmosphere, with test connection and backup PTFE packing
- **Characteristic** · Linear
- **Trim materials** · Stellite 6, ceramic and others
- **Plug seal** · Lapped-in metal seal
- **Pressure balanced version** · For high differential pressures
- **Class 1500 and 2500** · On request
- **End connections** · RTJ, socketweld and buttweld ends
- **Flow divider** · For noise level reduction, see Data Sheet T 8081
- **Heating jacket, versions for sour gas according to NACE** · Details on request

Fig. 1 · Type 3255/3271 Pneumatic Globe Control Valve

### Actuator Combinations

**Type 3255/3271** (Fig. 1) · With Type 3271 Pneumatic Actuator · For operation with or without yoke-mounted positioner, details see T 8310

**Type 3255/3277** · With Type 3277 Pneumatic Actuator · For integral positioner/accessory mounting according to SAMSON "Valve Management" System, details see T 8311

**DIN Versions · See Data Sheet T 8062 EN** **JIS · On request**

| Associated Information Sheets | | |
|---|---|---|
| | Valves | T 8000 |
| | Actuators | T 8300 |

**Edition August 2002** **ANSI Version**

## Technical Data Sheet T 8062

**Principle of Operation (Figs. 2 and 3)**

The process medium flows through the valve in the direction indicated by the arrow on the body. The position of the 3-stage or 5-stage valve plug determines the free area between the valve seats and plugs and hence the pressure drop or flow rate through the valve.

The pressure drop occurs in stages so that critical operating conditions like cavitation, excessive wear and high noise emissions are avoided. Additionally, the plug stem is bottom-guided for added stability and to limit vibrations.

A pressure-balanced version can be used with high differential pressures where the force produced by the actuator in the unbalanced version would be insufficient to close the valve.

The valves can also be equipped with flow dividers to further reduce the noise level.

**Fail-safe action**

Depending on the arrangement of the diaphragm plate and springs within the actuator, the control valve offers two different fail-safe actions upon loss of air supply (see Technical Data Sheets T 8310 and T 8311 for details):

**Actuator "extends"stem (fail-close)**

The actuator springs close the valve upon loss of air supply.

**Actuator "retracts" stem (fail-open)**

The actuator springs open the valve upon loss of air supply.

**Selection and sizing of Type 3255 Multi-Stage Control Valves**

Control valves with multi-stage plugs must be carefully sized. Therefore, SAMSON will assume the responsibility of properly sizing the Type 3255 control valves.

For correct sizing of these control valves, please supply the following operating data:

Process medium ... Flow rate ...

Inlet pressure ... Outlet pressure ...

Temperature ...

Maximum shut-off $\Delta p$ for actuator sizing ...

Air/power supply available for actuator, max./min. ...

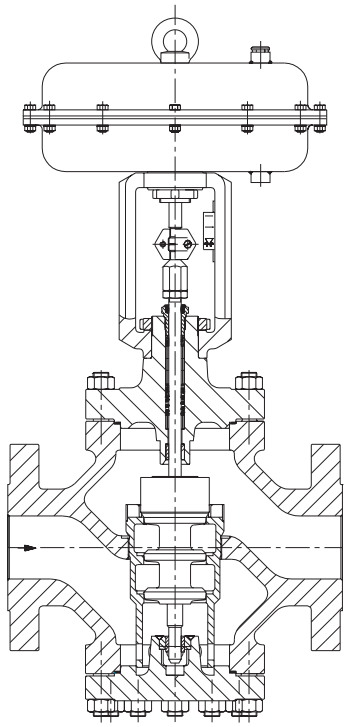

Fig. 2 · Type 3255 Globe Valve with 3-Stage Axial Plug

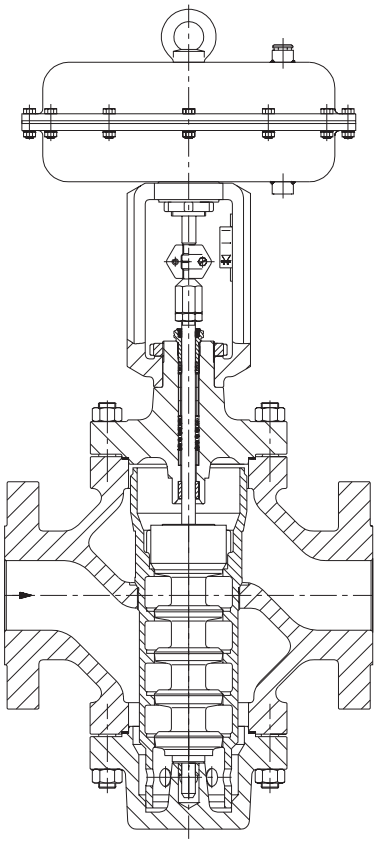

Fig. 3 · Type 3255 Globe Valve with 5-Stage Axial Plug

**Table 1 · Technical Data**

| **Nominal Valve Size** | | | **2″ ... 16″** | | |
|---|---|---|---|---|---|
| **Body material, ASTM** (also see Table 2) | | | **Carbon steel A 216 WCB** | **High-Temperature Carbon steel A 217 WC6** | **Stainless steel A 351 CF8M** |
| End connections | | Flanges | RF (raised face) and RTJ (ring-type joint) | | |
| | | Welding ends | Socketweld, buttweld, according to ANSI B16.11, B16.25 | | |
| Pressure rating | | Class | 150 ... 900, according to ANSI B16.34 [1] | | |
| Seat/Plug seal | | | Metal sealing or lapped-in metal sealing | | |
| Packing design | | | V-ring, spring-loaded, self-adjusting or adjustable | | |
| Flow direction (standard) | | | Flow to Open (FTO) | | |
| Cv values | | | See Figure 4 | | |
| Characteristic | | | Equal percentage or linear | | |
| Rangeability | | | 30:1 | | |
| Dimensions and Weights | | | See Tables 3...6 | | |
| **Temperature ranges in °F (°C)** · Max. operating pressures according to Pressure-Temperature Diagrams (see Information Sheet T 8000-2) | | | | | |
| Body without insulating section | | | 15 … 430 °F (–10 … 220 °C) · Up to 660 °F (350 °C) with high-temperature packing | | |
| Body with | | Insulating or bellows section | –20...800 °F (–29...427 °C) | –20...930 °F (–29...500 °C) | –328...930 °F (–200...500°C) |
| Valve plug[2] | Standard | Metal sealing | –328...930 °F (–200...500 °C) | | |
| | Balanced | PTFE ring | –328...430 °F (–200...220 °C) | | |
| | | Graphite ring | 430...930 °F ( 220...500 °C) | | |
| **Leakage rate class** according to ANSI/FCI F70-2 (IEC 60 534 Part 4) | | | | | |
| Valve plug | Standard | Metal sealing | IV | | |
| | | Lapped-in metal | IV-S2 · 4″ and upwards: IV-S1 | | |
| | Balanced | Metal sealing | With PTFE balancing seal: IV · With graphite balancing seal: III | | |

[1] Up to Class 2500 on request.

[2] Only in combination with a suitable body material.

**Table 2 · Materials**

| **Valve body** [1] | | **Carbon steel ASTM A 216 WCB** | **High-Temperature Carbon steel ASTM A 217 WC6** | **Stainless steel ASTM A 351 CF8M** |
|---|---|---|---|---|
| Bonnet | | A182 F12 | | A182 F316 |
| Yoke | | A 395 (WN 0.7043) | | |
| Seat and Plug [2] | | AISI 410 (WN 1.4006) | | AISI 316Ti (WN 1.4571) |
| Pressure balance seal ring | | PTFE with carbon · Graphite | | |
| Guide bushings | | AISI 440B (WN 1.4112) | | Hastelloy C |
| Stuffing box | V-ring packing | PTFE/Carbon, with spring AISI 301 (WN 1.4310) | | |
| | Adjustable packing | Graphite and carbon rings | | |
| Body gasket | | AISI 316Ti (WN 1.4571) | | |
| Insulating/bellows extension housing | | A182 F12 | | A182 F316 |
| Metal bellows insert | | AISI 316Ti (WN 1.4571) | | |
| Exterior hardware, nameplates, travel indicator, couplings | | AISI 304, AISI 316 and ASI 430F (WN 1.4301, WN 1.4571, WN 1.4104) | | |

[1] Other materials available upon request

[2] Seats and plugs also available with Stellited facing or complete Stellite 6 plug

**Table 3a · Dimensions of standard version in inches**

| Globe Valve | | Size | in | 2″ | 3″ | 4″ | 6″ | 8″ | 10″ | 12″ | 16″ |
|---|---|---|---|---|---|---|---|---|---|---|---|
| Length L | | Class 150 | in | 10.00 | 11.75 | 13.88 | 17.75 | 21.38 | 26.50 | 29.00 | 40.00 |
| | | Class 300 | in | 10.50 | 12.50 | 14.50 | 18.62 | 22.38 | 27.88 | 30.50 | 41.62 |
| | | Class 600 | in | 11.25 | 13.25 | 15.50 | 20.00 | 24.00 | 29.62 | 32.25 | 43.62 |
| | | Class 900 | in | 14.50 | 15.00 | 18.00 | 24.00 | 29.00 | 33.00 | 38.00 | 44.50 |
| H1 for actuator | 700 $cm^2$ | Class 150/900 | in | 18.11 | | 18.90 | 28.94 | 31.69 | – | | |
| | 1400 $cm^2$ | Class 150/900 | in | 20.28 | | 21.06 | 28.94 | 31.69 | 33.85 | 50.79 | – |
| | 2800 $cm^2$ | Class 150/900 | in | – | | | 39.00 | 41.75 | 43.90 | 50.79 | |
| H2 (approx.) for plug | | 3-Stage | in | 7.09 | 7.48 | 9.45 | 12.60 | 15.35 | 16.14 | 18.90 | 22.05 |
| | | 5-Stage | in | 8.66 | 10.04 | 11.22 | 16.54 | On request | | | |

| Pneumatic Actuator | Size | 700 | 1400 | 2800 | 2 x 2800 |
|---|---|---|---|---|---|
| | $in^2$ | 108 | 217 | 434 | |
| Diaphragm ∅ D | in | 15.4 | 20.9 | 30.3 | |
| H | in | 7.7 | 11.3 | 24.4 | 44.5 |
| H3 [1] | in | 7.5 | 24.0 | 25.5 | |
| Thread | | M30 x 1.5 | M 60 x 1.5 | M 100 x 2 | |
| a (with Type 3271 Actuator) | | NPT 3/8 | NPT 3/4 | NPT 1 | |

[1] Minimum clearance for actuator disassembly

**Table 3b · Weights of standard version in lbs**

| Globe Valve | Size | in | 2″ | 3″ | 4″ | 6″ | 8″ | 10″ | 12″ | 16″ |
|---|---|---|---|---|---|---|---|---|---|---|
| Weight, without actuator | Class 150/300 | lbs | On request | | 310 | 730 | 1375 | On request | | |
| | Class 600 | lbs | | | 310 | 730 | 1375 | | | |
| | Class 900 | lbs | | | 375 | 850 | 1935 | | | |

| Pneumatic Actuator | | Size | 700 | 1400 | 2800 | 2 x 2800 |
|---|---|---|---|---|---|---|
| | | $in^2$ | 108 | 217 | 434 | 2 x 434 |
| Weight, Type 3271 | Without | lbs | 48.5 | 154 | 992 | 2095 |
| | With handwheel | lbs | 59.5 | Only with side-mounted handwheel, see T 8310 | | |

Fig. 4 · Correlation between valve size and Cv value for liquids

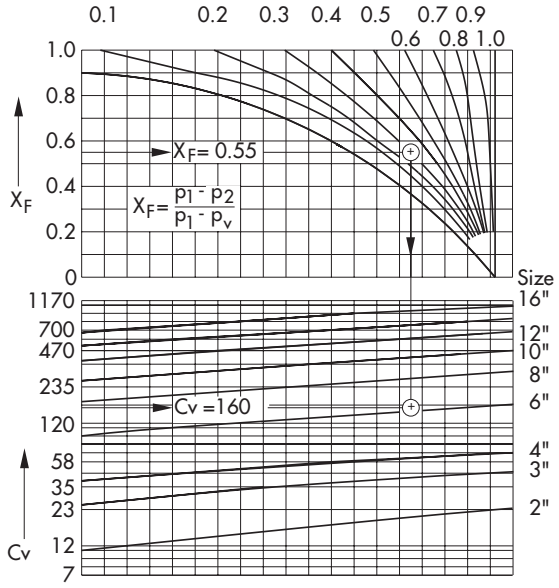


Version with 3-stage axial plug

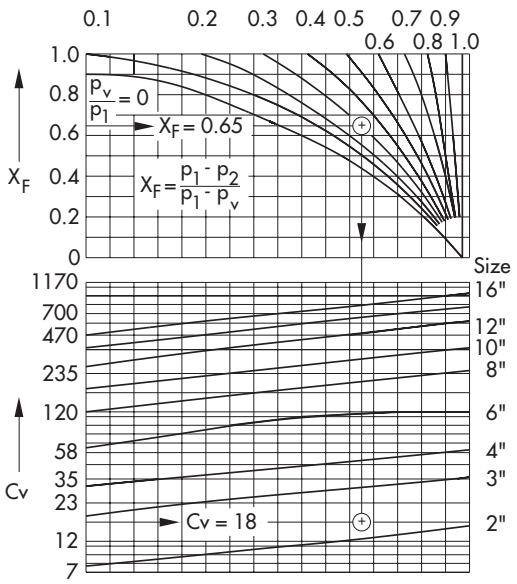


Version with 5-stage axial plug

**Table 4a · Dimensions of standard version in mm**

| Globe Valve | | Size | in | 2″ | 3″ | 4″ | 6″ | 8″ | 10″ | 12″ | 16″ |
|---|---|---|---|---|---|---|---|---|---|---|---|
| | | | mm | 50 | 80 | 100 | 150 | 200 | 250 | 300 | 400 |
| Length L | | Class 150 | mm | 254 | 298 | 353 | 451 | 543 | 673 | 737 | 1016 |
| | | Class 300 | mm | 267 | 318 | 368 | 473 | 568 | 708 | 775 | 1057 |
| | | Class 600 | mm | 286 | 337 | 394 | 508 | 610 | 752 | 819 | 1108 |
| | | Class 900 | mm | 368 | 381 | 457 | 610 | 737 | 838 | 965 | 1130 |
| H1 for actuator | 700 cm² | Class 150/900 | mm | 460 | | 480 | 735 | 805 | – | | |
| | 1400 cm² | Class 150/900 | mm | 515 | | 535 | 735 | 805 | 860 | 1290 | – |
| | 2800 cm² | Class 150/900 | mm | – | | | 990 | 1060 | 1115 | 1290 | |
| H2 (approx.) for plug | | 3-Stage | mm | 180 | 190 | 240 | 320 | 390 | 410 | 480 | 560 |
| | | 5-Stage | mm | 220 | 255 | 285 | 420 | On request | | | |

| Pneumatic Actuator | Size | 700 | 1400 | 2800 | 2 x 2800 |
|---|---|---|---|---|---|
| | cm² | 700 | 1400 | 2800 | |
| Diaphragm ∅ D | mm | 390 | 530 | 770 | |
| H | mm | 196 | 287 | 620 | 1130 |
| H3 [1] | mm | 190 | 610 | 648 | |
| Thread | | M30 x 1.5 | M 60 x 1.5 | M 100 x 2 | |
| a (with Type 3271 Actuator) | | NPT 3/8 | NPT 3/4 | NPT 1 | |

[1] Minimum clearance for actuator disassembly

**Table 4b · Weights of standard version in kg**

| Globe Valve | Size | in | 2″ | 3″ | 4″ | 6″ | 8″ | 10″ | 12″ | 16″ |
|---|---|---|---|---|---|---|---|---|---|---|
| | | mm | 50 | 80 | 100 | 150 | 200 | 250 | 300 | 400 |
| Weight, without actuator | Class 150/300 | kg | On request | | 141 | 332 | 625 | On request | | |
| | Class 600 | kg | | | 141 | 332 | 625 | | | |
| | Class 900 | kg | | | 171 | 386 | 880 | | | |

| Pneumatic Actuator | | Size | 700 | 1400 | 2800 | 2 x 2800 |
|---|---|---|---|---|---|---|
| | | cm² | 700 | 1400 | 2800 | 2 x 2800 |
| Weight, Type 3271 | Without | kg | 22 | 70 | 450 | 950 |
| | With handwheel | kg | 27 | Only with side-mounted handwheel, see T 8310 | | |

Fig. 5 · Dimensions

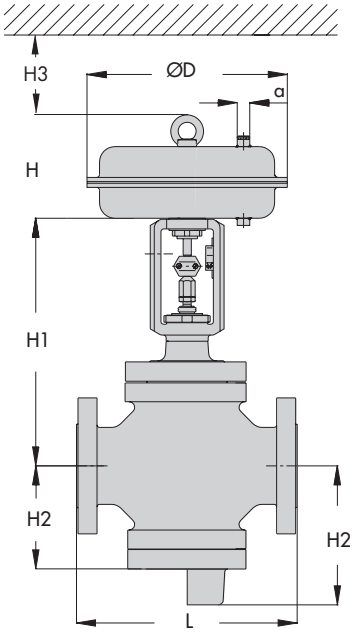


Type 3255/3271: Left; 3-Stage; Right, 5-Stage

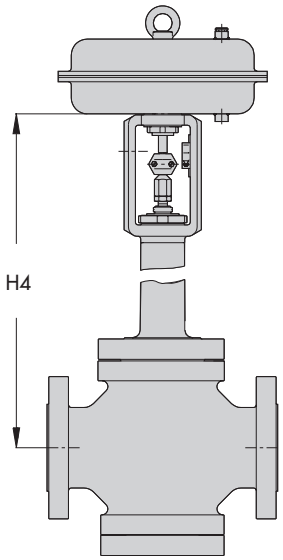


Type 3255/3271 with bellows or insulating section

**Table 5a · Dimensions and weights of standard version with insulating section in inches and lbs** · Without actuator

| Nominal size | | | 2″ | 3″ | 4″ | 6″ | 8″ | 10″ | 12″ | 16″ |
|---|---|---|---|---|---|---|---|---|---|---|
| H4 for actuator | 108 $in^2$/700 $cm^2$ | in | 29.13 | | 29.92 | 42.72 | – | | | |
| | 217 $in^2$/1400 $cm^2$ | in | 31.30 | | 32.09 | 42.72 | 53.74 | 58.46 | 71.26 | – |
| | 434 $in^2$/2800 $cm^2$ | in | – | | | 52.76 | 63.78 | 68.50 | 71.26 | 73.62 |
| Weight , without actuator for | Class 150...900 | lb | On request | | | | | | | |

**Table 5b · Dimensions and weights of standard version with metal bellows in inches and lbs** · Without actuator

| Nominal size | | | 2″ | 3″ | 4″ | 6″ | 8″ | 10″ | 12″ | 16″ |
|---|---|---|---|---|---|---|---|---|---|---|
| H4 for actuator | 108 $in^2$/700 $cm^2$ | in | 26.77 | | 27.76 | 42.72 | 46.85 | – | | |
| | 217 $in^2$/1400 $cm^2$ | in | 28.94 | | 29.92 | 44.88 | 46.85 | 51.97 | 64.57 | – |
| | 434 $in^2$/2800 $cm^2$ | in | – | | | 55.12 | 57.09 | 61.81 | 64.57 | 67.72 |
| Weight, without actuator for | Class 150...900 | lb | On request | | | | | | | |

**Table 6a · Dimensions and weights of standard version with insulating section in mm and kg** · Without actuator

| Nominal size | | in | 2″ | 3″ | 4″ | 6″ | 8″ | 10″ | 12″ | 16″ |
|---|---|---|---|---|---|---|---|---|---|---|
| | | mm | 50 | 80 | 100 | 150 | 200 | 250 | 300 | 400 |
| H4 for actuator | 108 $in^2$/700 $cm^2$ | mm | 740 | | 760 | 1085 | – | | | |
| | 217 $in^2$/1400 $cm^2$ | mm | 795 | | 815 | 1085 | 1365 | 1485 | 1810 | – |
| | 434 $in^2$/2800 $cm^2$ | mm | – | | | 1340 | 1620 | 1740 | 1810 | 1870 |
| Weight, without actuator for | Class 150...900 | kg | On request | | | | | | | |

**Table 6b · Dimensions and weights of standard version with metal bellows in mm and kg** · Without actuator

| Nominal size | | in | 2″ | 3″ | 4″ | 6″ | 8″ | 10″ | 12″ | 16″ |
|---|---|---|---|---|---|---|---|---|---|---|
| | | mm | 50 | 80 | 100 | 150 | 200 | 250 | 300 | 400 |
| H4 for actuator | 108 $in^2$/700 $cm^2$ | mm | 680 | | 705 | 1085 | 1190 | – | | |
| | 217 $in^2$/1400 $cm^2$ | mm | 735 | | 760 | 1140 | 1190 | 1320 | 1640 | – |
| | 434 $in^2$/2800 $cm^2$ | mm | – | | | 1400 | 1450 | 1570 | 1640 | 1720 |
| Weight, without actuator for | Class 150...900 | kg | On request | | | | | | | |

**Specifications subject to change without notice**

SAMSON CONTROLS INC.
1-105 Riviera Drive
Markham · Ontario · Canada · L3R 5J7
Tel. (905) 474-0354 · Telefax (905) 474-0998
www.samsoncontrols.com

SAMSON CONTROLS INC.
4111 Cedar Boulevard
Baytown · Texas · USA · 77520-8588
Tel. (281) 383-3677 · Telefax (281) 383-3690
www.samson-usa.com