MOUNTING AND OPERATING INSTRUCTIONS

EB 3963 EN

Translation of original instructions



Type 3963 Solenoid Valves

CE Ex certified

Edition January 2022

Note on these mounting and operating instructions

These mounting and operating instructions (EB) assist you in mounting and operating the device safely. The instructions are binding for handling SAMSON devices. The images shown in this document are for illustration purposes only. The actual product may vary.

⇨ For the safe and proper use of these instructions, read them carefully and keep them for later reference.

⇨ If you have any additional questions not related to the contents of this document, contact SAMSON's After-sales Service (aftersales-fr@samsongroup.com).

Documents relating to the device, such as the mounting and operating instructions, are available on our website:
▶ https://www.samsongroup.com/en/downloads/documentation

Definition of signal words

⚠ DANGER

Hazardous situations which, if not avoided, will result in death or serious injury

⚠ WARNING

Hazardous situations which, if not avoided, could result in death or serious injury

NOTICE

Property damage message or malfunction

Note

Additional information

Tip

Recommended action

1 Safety instructions and measures 5
1.1 Notes on possible severe personal injury 6
1.2 Notes on possible personal injury 6
1.3 Notes on possible property damage 7
1.4 Special instructions concerning explosion protection 7
1.5 Warnings on the device 9

2 Markings on the device 10
2.1 Nameplate 10
2.2 Article code 11

3 Design and principle of operation 14
3.1 Technical data 16
3.2 Ex approvals 23
3.3 Dimensions 24

4 Shipment and on-site transport 45
4.1 Accepting the delivered goods 45
4.2 Removing the packaging from the solenoid valve 45
4.3 Transporting the solenoid valve 45
4.4 Lifting the solenoid valve 45
4.5 Storing the solenoid valve 45

5 Installation 46
5.1 Installation conditions 46
5.2 Preparation for installation 46
5.3 Mounting the solenoid valve 46
5.3.1 Rail mounting 47
5.3.2 Wall mounting 47
5.3.3 Attachment to rotary actuator with NAMUR interface 47
5.3.4 Mounting on linear actuator with NAMUR rib 48
5.3.5 Mounting on linear actuators using CrNiMo steel pipe fitting 49
5.3.6 Attachment to mounting block for Type 3277 Linear Actuator 51
5.4 Pneumatic connection 52
5.4.1 Sizing the connecting line 52
5.4.2 Compressed air quality 52
5.5 Electrical connection 53
5.5.1 Switching amplifier 54
5.5.2 Cable entry with cable gland 54
5.5.3 Connecting the power supply 54

6 Start-up 55
6.1 Changeover to external pilot supply over port 9 55
6.2 Exhaust air feedback 56
6.3 Restrictors 57

7 Operation 58
7.1 Degree of protection 58
7.2 Manual override 58

8 Malfunctions 59
8.1 Troubleshooting 59
8.2 Emergency action 60

9 Servicing 61

10 Decommissioning 62

11 Removal 63

12 Repairs 64
12.1 Send the solenoid valve to SAMSON 64

13 Disposal 65

14 Certificates 66

15 Appendix 104
15.1 Accessories 104
15.2 After-sales service 106

1 Safety instructions and measures

Intended use

The Type 3963 Solenoid Valve is mounted onto pneumatic linear or rotary actuators to control them. Upon failure of the air supply, the solenoid valve vents the actuator, causing the valve to move to the fail-safe position determined by the actuator. The device is designed to operate under exactly defined conditions (e.g. operating pressure, temperature). Therefore, operators must ensure that the solenoid valve is only used in applications where the operating conditions correspond to the technical data. In case operators intend to use the solenoid valve in applications or conditions other than those specified, contact SAMSON.

SAMSON does not assume any liability for damage resulting from the failure to use the device for its intended purpose or for damage caused by external forces or any other external factors.

⇨ Refer to the technical data for limits and fields of application as well as possible uses (see Chapter 3).

Reasonably foreseeable misuse

The solenoid valve is **not** suitable for the following applications:

– Use outside the limits defined during sizing and by the technical data

Furthermore, the following activities do not comply with the intended use:

– Use of non-original spare parts
– Performing service and repair work not described

Qualifications of operating personnel

The solenoid valve must be mounted, started up, serviced and repaired by fully trained and qualified personnel only; the accepted industry codes and practices must be observed. According to these mounting and operating instructions, trained personnel refers to individuals who are able to judge the work they are assigned to and recognize possible hazards due to their specialized training, their knowledge and experience as well as their knowledge of the applicable standards.

Personal protective equipment

No personal protective equipment is required for the direct handling of the solenoid valve. Work on the control valve may be necessary when mounting or removing the device.

⇨ Observe the requirements for personal protective equipment specified in the valve documentation.

⇨ Check with the plant operator for details on further protective equipment.

Revisions and other modifications

Revisions, conversions or other modifications of the solenoid valve are not authorized by SAMSON. They are performed at the user's own risk and may lead to safety hazards, for example. Furthermore, the solenoid valve may no longer meet the requirements for its intended use.

Warning against residual hazards

The solenoid valve has a direct influence on the control valve when it has been installed. To avoid personal injury or property damage, plant operators and operating personnel must prevent hazards that could be caused in the control valve by the process medium, the operating pressure, the signal pressure or by moving parts by taking appropriate precautions.

Plant operators and operating personnel must observe all hazard statements, warnings and caution notes in these mounting and operating instructions, especially for installation, start-up and service work.

Responsibilities of the operator

Operators are responsible for proper use and compliance with the safety regulations. Operators are obliged to provide these mounting and operating instructions to the operating personnel and to instruct them in proper operation. Furthermore, operators must ensure that operating personnel or third parties are not exposed to any danger.

Operators are additionally responsible for ensuring that the limits for the solenoid valve defined in the technical data and test certificates are observed.

Responsibilities of operating personnel

Operating personnel must read and understand these mounting and operating instructions as well as the referenced documents and observe the specified hazard statements, warnings and caution notes. Furthermore, operating personnel must be familiar with the applicable health, safety and accident prevention regulations and comply with them.

Referenced standards, directives and regulations

The product (Type 3963) with a CE marking fulfills the requirements of the following Directives:

- Type 3963-0
  - RoHS Directive 2011/65/EU
  - EMC Directive 2014/30/EU
  - Low-voltage Directive 2014/35/EU
  - RoHS Directive 2015/863/EU (RoHS 3)

- Types 3963-1, -8
  - RoHS Directive 2011/65/EU
  - EMC Directive 2014/30/EU
  - ATEX Directive 2014/34/EU
  - RoHS Directive 2015/863/EU (RoHS 3)

The declarations of conformity and certificates are included in Chapter 14.

Referenced documents

The following documents apply in addition to these mounting and operating instructions:

- The mounting and operating instructions of the components on which the solenoid valve is mounted (valve, actuator, valve accessories etc.)
- Safety Manual ▶ SH 3963

The latest versions of the documents are available on our website:

▶ https://www.samsongroup.com/en/downloads/documentation

1.1 Notes on possible severe personal injury

⚠ DANGER

Risk of fatal injury due to electric shock.

Before starting up the solenoid valve, electrical installation work must be performed. An electric shock due to incorrect work practices may cause death.

⇨ Before connecting wiring, performing any work on the device or opening the device, disconnect the supply voltage and protect it against unintentional reconnection.

⇨ For electrical installation, observe the relevant electrotechnical regulations and the accident prevention regulations that apply in the country of use.

⇨ In Germany, observe the VDE regulations and the accident prevention regulations of the employers' liability insurance.

⚠ DANGER

Risk of fatal injury due to the ignition of an explosive atmosphere.

Incorrect installation, operation or maintenance of the device in potentially explosive atmospheres may lead to ignition of the atmosphere and ultimately to death.

⇨ The following regulations apply to installation in hazardous areas: EN 60079-14 (VDE 0165-1).

⇨ Installation, operation or maintenance of the solenoid valve is to be performed only by personnel who has undergone special training or instructions or who is authorized to work on explosion-protected devices in hazardous areas.

⇨ Read the special instructions concerning explosion protection (see Chapter 1.4).

1.2 Notes on possible personal injury

⚠ WARNING

Risk of personal injury due to moving parts on the valve.

During operation and when the solenoid valve is triggered, the valve moves through its entire travel range. Crush injuries to hands or fingers may occur if they are inserted into the valve.

⇨ While the valve moves, do not insert hands or fingers into the valve yoke and do not touch any moving valve parts.

⚠ WARNING

Intrinsic safety rendered ineffective in intrinsically safe devices.

Every time the solenoid valve is operated, even when it is not installed in the plant (e.g. during maintenance, calibration and work on the device), it must be ensured that the conditions for intrinsically safe circuits are observed.

⇨ Only connect intrinsically safe devices intended for use in intrinsically safe circuits to certified intrinsically safe input-connected units.

⇨ Do not place intrinsically safe devices back into operation that were connected to intrinsically safe input-connected units without certification.

⇨ Do not exceed the maximum permissible electric values specified in the EU type examination certificates when interconnecting intrinsically safe electrical equipment (U_i or U_0, I_i or I_0, P_i or P_0, C_i or C_0 and L_i or L_0).

⚠ WARNING

Sudden loud noise when the pneumatic actuator vents.

The solenoid valve may create a loud noise when the pneumatic actuator is vented. This can cause hearing damage.

⇨ Wear hearing protection when working near the valve.

⚠ WARNING

Risk of personal injury due to incorrect operation, use or installation as a result of information on the device being illegible.

Over time, markings, labels and nameplates on the device may become covered with dirt or become illegible in some other way. As a result, hazards may go unnoticed and the necessary instructions not followed. There is a risk of personal injury.

⇨ Keep all relevant markings and inscriptions on the device in a constantly legible state.

⇨ Immediately renew damaged, missing or incorrect nameplates or labels.

1.3 Notes on possible property damage

NOTICE

Risk of damage to the solenoid valve due to incorrect mounting position.

⇨ Do not mount the solenoid valve with the vent opening facing upward.

⇨ Do not seal the vent opening when the device is installed on site.

NOTICE

Risk of damage to the solenoid valve due to impermissible pressures.

⇨ Do not connect a supply pressure to the solenoid valve that exceeds the maximum supply pressure.

NOTICE

Incorrect assignment of the terminals will damage the solenoid valve and will lead to malfunction.

The prescribed terminal assignment must be observed for the solenoid valve to function properly.

⇨ Connect the wiring to the solenoid valve as described in Chapter 5.5.

1.4 Special instructions concerning explosion protection

If a part of the device on which the explosion protection is based needs to be serviced, the device must not be put back into operation until a qualified inspector has assessed it according to explosion protection requirements, has issued an inspection certificate, or given the device a mark of conformity. Inspection by a qualified inspector is not required if the manufacturer performs a routine test on the device before putting it back into operation and the passing of the routine test is documented by attaching a mark of conformity to the device. Replace explosion-protected components only with original, routine-tested components by the manufacturer.

Equipment for use in zone 2

– In equipment operated in compliance with type of protection Ex nA (non-sparking equipment) according to EN 60079-15, circuits may be connected, interrupted or switched while energized only during installation, maintenance or repair. The special conditions of use mentioned in the statement of conformity must be observed for the rated values and the installation of the series-connected fuse for interconnection of Ex nA circuits.

Equipment in type of protection Ex ia (intrinsic safety)

⇨ In equipment operated with type of protection Ex ia (intrinsic safety), only connect, isolate or switch circuits while energized during installation, maintenance or repair.

⇨ Do not open the enclosure cover in potentially explosive dust atmospheres during operation.

Servicing explosion-protected devices

If a part of the device on which the explosion protection is based needs to be serviced, the device must not be put back into operation until a qualified inspector has assessed it according to explosion protection requirements, has issued an inspection certificate or given the device a mark of conformity.

Inspection by a qualified inspector is not required if the manufacturer performs a routine test on the device before putting it back into operation and the passing of the routine test is documented by attaching a mark of conformity to the device.

⇨ Retain testing and servicing documents as well as certificates issued by the manufacturer or inspector together with other safety-relevant documents for the device or plant.

Replace explosion-protected components only with original, routine-tested components by the manufacturer.

Devices that have already been operated outside hazardous areas and are intended for future use inside hazardous areas must comply with the safety requirements placed on serviced devices. Before being operated inside hazardous areas, test the devices according to the specifications for servicing explosion-protected devices.

A repair of flameproof gaps is not permitted. If a corresponding gap is damaged, the device must be replaced.

Repair of flameproof gaps

A repair of flameproof gaps is not permitted. If a corresponding gap is damaged, the device must be replaced.

1.5 Warnings on the device

Warning symbols	Meaning
	Warning of sudden loud noise The solenoid valve mounted on the control valve can cause the pneumatic actuator to vent. A loud noise may occur during venting. This can cause hearing damage.

2 Markings on the device

2.1 Nameplate

The nameplate shown was up to date at the time of publication of this document. The nameplate on the device may differ from the one shown.

Version without explosion protection

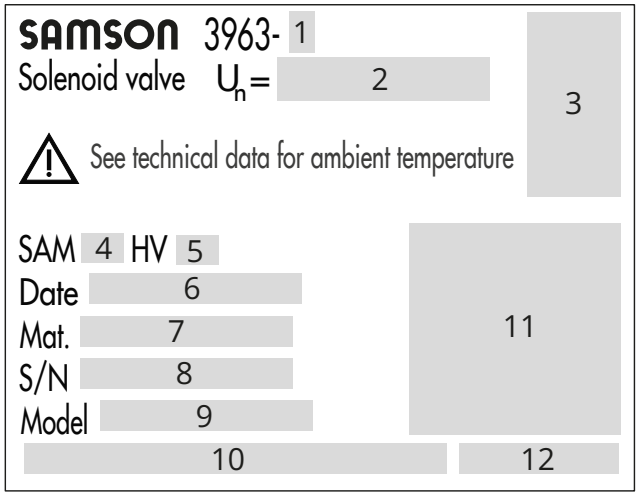

1 Version
2 Nominal signal
3 Mark of conformity
4 Code for NAMUR Recommendation NE 53 (internal specification)
5 Hardware version
6 Date of manufacture
7 Material number
8 Serial number
9 Model number
10 Production site
11 Identification code (scannable)
12 Product origin

Version with explosion protection

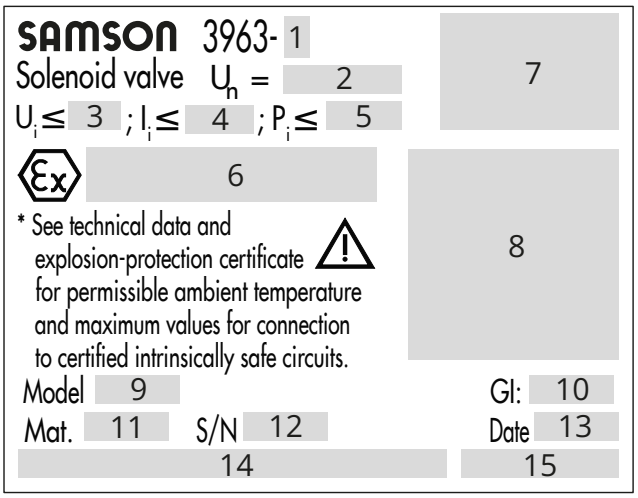

1 Version
2 Nominal signal
3 Output voltage
4 Output current
5 Power consumption
6 Ex marking
7 Mark of conformity
8 Identification code (scannable)
9 Model number
10 Device index
11 Material number
12 Serial number
13 Date of manufacture
14 Production site
15 Product origin

2.2 Article code

i ***Note***

The "NAMUR interface according to VDI/VDE 3845" version in combination with K_{VS} 0.32 has an Ematal coating.

Type 3963-		x	x	x	x	x	x	x	x	x	x	x	x	x	x	x	x
Type of protection		|	|	|	|	|	|	|	|	|	|	|	|	|	|	|	|	|
Without		0	|	|	|	|	|	|	|	|	|	|	|	|	|	|	|
ATEX[1)]	II 2 G Ex ia IIC T6...T4 Gb (max. 60/70/80 °C in T6/T5/T4)	1	|	|	|	|	|	|	|	|	|	|	|	|	|	|	|
FM	Ex ia (max. 60/70/80 °C in T6/T5/T4)	3	|	|	|	|	|	|	|	|	|	|	|	|	|	|	|
ATEX[2)]	II 3G Ex nA II T6 Gc II 3G Ex ic IIC T6 Gc	8	|	|	|	|	|	|	|	|	|	|	|	|	|	|	|
				|	|	|	|	|	|	|	|	|	|	|	|	|	|
Nominal signal				|	|	|	|	|	|	|	|	|	|	|	|	|	|
6 V DC, 5.47 mW power consumption				1	|	|	|	|	|	|	|	|	|	|	|	|	|
12 V DC, 13.05 mW power consumption				2	|	|	|	|	|	|	|	|	|	|	|	|	|
24 V DC, 26.71 mW power consumption				3	|	|	|	|	|	|	|	|	|	|	|	|	|
230 V AC, 0.46 VA power consumption (without explosion protection)				5	|	|	|	|	|	|	|	|	|	|	|	|	|
115 V AC, 0.17 VA power consumption (without explosion protection)				6	|	|	|	|	|	|	|	|	|	|	|	|	|
					|	|	|	|	|	|	|	|	|	|	|	|	|
Manual override					|	|	|	|	|	|	|	|	|	|	|	|	|
Without manual override SIL/TÜV					0	|	|	|	|	|	|	|	|	|	|	|	|
Pushbutton underneath the enclosure cover SIL/TÜV					1	|	|	|	|	|	|	|	|	|	|	|	|
External pushbutton (accessible using a pin)					2	|	|	|	|	|	|	|	|	|	|	|	|
External switch (accessible using a screwdriver)					3	|	|	|	|	|	|	|	|	|	|	|	|
						|	|	|	|	|	|	|	|	|	|	|	|
Switching function						|	|	|	|	|	|	|	|	|	|	|	|
3/2-way function with spring-return mechanism SIL/TÜV (all K_{VS} coefficients)						0	|	|	|	|	|	|	|	|	|	|	|	|
5/2-way function with spring return mechanism (K_{VS} 0.16, 1.4, 2.9, 4.3; SIL with K_{VS} 0.16)						1	|	|	|	|	|	|	|	|	|	|	|	|
5/2-way function with two detent positions TÜV (K_{VS} 1.4/2.9)						2	|	|	|	|	|	|	|	|	|	|	|	|
5/3-way function with spring-centered mid-position (ports 2 and 4 closed) (K_{VS} 1.4)						3	|	|	|	|	|	|	|	|	|	|	|	|
5/3-way function with spring-centered mid-position (ports 2 and 4 vented) TÜV (K_{VS} 1.4)						5	|	|	|	|	|	|	|	|	|	|	|	|
6/2-way function with spring return mechanism (K_{VS} 0.16/4.3; SIL with K_{VS} 0.16)						8	|	|	|	|	|	|	|	|	|	|	|	|
								|	|	|	|	|	|	|	|	|	|	|
Restrictors							|	|	|	|	|	|	|	|	|	|	|
Without restrictors SIL/TÜV (all K_{VS} coefficients)							0	|	|	|	|	|	|	|	|	|	|	|
1 exhaust air restrictor (3/2-way function/NAMUR interface or mounting block/K_{VS} 0.16)							1	|	|	|	|	|	|	|	|	|	|	|
2 exhaust air restrictors (5/2-way function/NAMUR interface/K_{VS} 0.16)							2	|	|	|	|	|	|	|	|	|	|	|
1 supply air/1 exhaust air restrictor (3/2-way function/NAMUR interface/K_{VS} 0.16)							3	|	|	|	|	|	|	|	|	|	|	|
								|	|	|	|	|	|	|	|	|	|	|

Mounting	|	|	|	|	|	|	|	|	|	|	|
NAMUR interface according to VDI/VDE 3845 SIL/TÜV (all K_{VS} coefficients)[8)]	0	|	|	|	|	|	|	|	|	|
Threaded connection for rail, wall or pipe mounting SIL/TÜV (K_{VS} 0.16, 0.32, 1.4, 4.3)	1	|	|	|	|	|	|	|	|	|
NAMUR rib according to IEC 60534-6 (NAMUR) SIL/TÜV (K_{VS} 0.32)	2	|	|	|	|	|	|	|	|	|
Mounting block for Type 3277 Linear Actuator SIL/TÜV (K_{VS} 0.16, 0.32)	3	|	|	|	|	|	|	|	|	|
Flange (Type 3963), only as spare part (K_{VS} 0.01/0.16)	4	|	|	|	|	|	|	|	|	|
		|	|	|	|	|	|	|	|	|
K_{VS} coefficient[3)]		|	|	|	|	|	|	|	|	|
0.16 SIL/TÜV		1	|	|	|	|	|	|	|	|
0.32 SIL/TÜV[8)]		2	|	|	|	|	|	|	|	|
1.4 TÜV		3	|	|	|	|	|	|	|	|
4.3 SIL/TÜV		4	|	|	|	|	|	|	|	|
0.01 (as spare part)		5	|	|	|	|	|	|	|	|
2.9 (NAMUR interface)		6	|	|	|	|	|	|	|	|
2.0 SIL/TÜV (NAMUR interface)		7	|	|	|	|	|	|	|	|
			|	|	|	|	|	|	|	|
Pneumatic connection			|	|	|	|	|	|	|	|
G ¼ (K_{VS} 0.16/0.32/1.4/2.0)			0	|	|	|	|	|	|	|
¼ NPT (K_{VS} 0.16/0.32/1.4/2.0)			1	|	|	|	|	|	|	|
G ½ (K_{VS} 2.9/4.3)			2	|	|	|	|	|	|	|
½ NPT (K_{VS} 2.9/4.3)			3	|	|	|	|	|	|	|
Without (pilot valve as spare part/mounting block for Type 3277 Linear Actuator)			4	|	|	|	|	|	|	|
				|	|	|	|	|	|	|
Pilot supply				|	|	|	|	|	|	|
Internal pilot supply for actuators for on/off service				0	|	|	|	|	|	|
External pilot supply for actuators for throttling service				1	|	|	|	|	|	|
					|	|	|	|	|	|
Electrical connection					|	|	|	|	|	|
Blanking plug M20x1.5					0	0	|	|	|	|
M20x1.5 cable gland, black polyamide					0	1	|	|	|	|
M20x1.5 cable gland, blue polyamide					1	1	|	|	|	|
M20x1.5 to ½ NPT adapter, aluminum					1	2	|	|	|	|
M20x1.5 cable gland (CEAG), black polyamide					1	3	|	|	|	|
M20x1.5 cable gland, nickel-plated brass					1	4	|	|	|	|
M20x1.5 cable gland, nickel-plated brass, blue					1	5	|	|	|	|
M20x1.5 cable gland (CEAG), blue polyamide					1	6	|	|	|	|
M20x1.5 cable gland (Jacob), blue polyamide					1	7	|	|	|	|
Device connector, type A, according to DIN EN 175301-803, black polyamide [1)]					2	3	|	|	|	|
Device connector with LED according to DIN EN 175301-803, black polyamide [1)]					2	5	|	|	|	|
M20x1.5 to ½ NPT adapter, stainless steel					2	6	|	|	|	|
							|	|	|	|

Degree of protection	|	|	|	|	|
IP54 with polyethylene filter	0	|	|	|	|
IP65 with filter check valve made of polyamide	1	|	|	|	|
IP65 with filter check valve made of stainless steel	2	|	|	|	|
NEMA 4 with filter check valve made of polyamide	4	|	|	|	|
NEMA 4 with filter check valve made of stainless steel	5	|	|	|	|
IP65 with labyrinth-type vent plug	6	|	|	|	|
		|	|	|	|
Ambient temperature[4]		|	|	|	|
-20 to +80 °C		0	|	|	|
-45 to +80 °C		2	|	|	|
			|	|	|
Safety function			|	|	|
Without			0	|	|
SIL[5]			1	|	|
TÜV[6]			2	|	|
			|	|	|
Special version[7]			|	|	|
Without			0	0	0
Material			|	|	|
Connecting plate/booster valve enclosure made of 1.4404 on request			0	0	1
Explosion protection			|	|	|
CCC Ex Ex ia IIC T4...T6 Gb			0	0	9

1) EC type examination certificate PTB 01 ATEX 2085

2) Statement of conformity PTB 01 ATEX 2086 X

3) The air flow rate when p_1 = 2.4 bar and p_2 = 1.0 bar can be calculated using the following formula: $Q = K_{VS} \times 36.22$ in m^3/h.

4) The permissible ambient temperature of the solenoid valve depends on the permissible ambient temperature of the components, type of protection and temperature class.

5) SIL according to IEC 61508

6) Emergency release or locking of compressed air supply

7) Further special versions on request

8) "NAMUR interface according to VDI/VDE 3845" version in combination with K_{VS} 0.32 with Ematal coating

3 Design and principle of operation

⇨ See Fig. 1.

Solenoid valves with single solenoid

Solenoid valves with a single solenoid consist of an i/p binary converter with (optional) manual override and single-controlled booster valve with return spring.

The air supply for the i/p binary converter is routed internally through the booster valve (delivered state). The solenoid valve can be converted to accept an external pilot supply at port 9 by turning a gasket.

The pressure reducer reduces the pilot pressure to 1.4 bar.

In the idle position, the flapper is lifted off the outlet nozzle by the spring. As a result, a pressure lower than the deactivation pressure of the integrated booster valve builds up in the pressure divider, which consists of the restrictor and outlet nozzle. When the solenoid coil is energized by an electric binary signal, the outlet nozzle is closed by the flapper against the force of the spring. This causes the pressure in the pressure divider to rise above the activation pressure of the integrated booster valve and switches it to the operating position.

After the solenoid coil is de-energized, the integrated booster valve is switched to the idle position again by a return spring.

Solenoid valves with double solenoid

Solenoid valves with a double solenoid consist of two i/p binary converters with (optional) manual override and double-controlled booster valve with two detent positions or spring-centered mid-position.

The air supply for the i/p binary converters is routed internally through the booster valve (delivered state). The solenoid valve can be converted to accept an external pilot supply at port 9 by turning two gaskets.

The pressure reducer reduces the pilot pressure to 1.4 bar.

In the idle position, the flapper is lifted off the outlet nozzle by the spring. As a result, a pressure lower than the deactivation pressure of the integrated booster valve builds up in the pressure divider, which consists of the restrictor and outlet nozzle. When the solenoid coil is energized by an electric binary signal, the outlet nozzle is closed by the flapper against the force of the spring. This causes the pressure in the pressure divider to rise above the activation pressure of the integrated booster valve and switches it to the operating position.

After the solenoid coil is de-energized, the operating position of the detented booster valve is kept until the opposing signal is received. The spring-centered booster valve is switched to the mid-position by a return spring after the solenoid coil is de-energized.

A simultaneous control of the i/p binary converter must be ruled out on the electric control level.

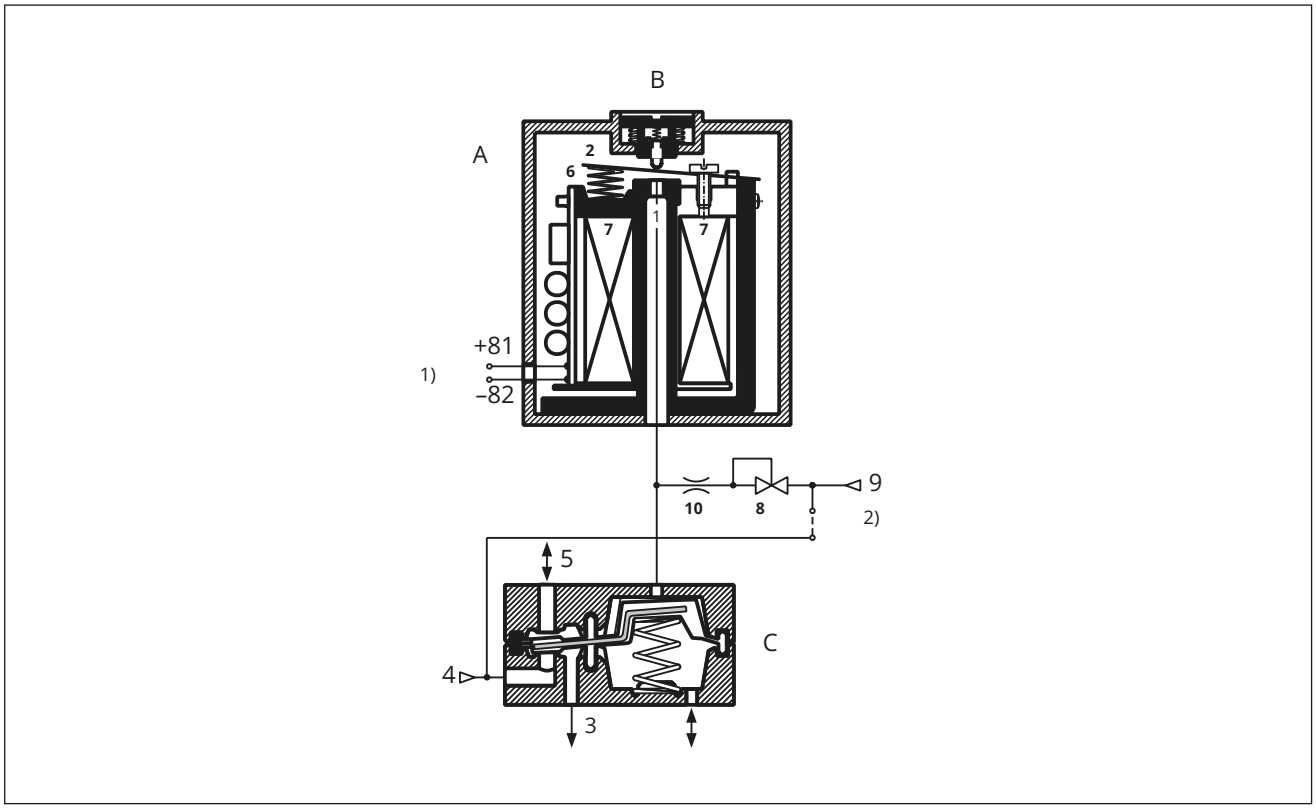

Fig. 1: *Function*

[1] Nominal signal
[2] Changeover to external pilot supply
A Binary i/p converter
B Manual override
C Booster valve
1 Outlet nozzle
2 Flapper plate
3 Port 3
4 Port 4
5 Port 5
6 Spring
7 Solenoid
8 Pressure reducer
9 Port 9
10 Restrictor

3.1 Technical data

Table 1: *Technical data · General*

Type 3963		
Design		Solenoid with flapper/nozzle assembly and booster valve
Degree of protection		IP54 with filter
		IP65 with filter check valve
Material	Enclosure	Polyamide PA 6-3-T-GF35, black
	Connecting plate	AlMg, powder coated, gray beige RAL 1019 or Ematal coating (depending on the version, see Chapter 2.2)
		1.4404 (see Chapter 2.2 for special versions)
		Polyamide PA 6-3-T-GF35, black
	Screws	1.4571
	Springs	1.4571
	Seals	Silicone rubber, Perbunan
	Diaphragms	Chloroprene rubber 57 Cr 868 (-20 to +80 °C)
		Silicone rubber (-45 to +80 °C)
Pilot supply	Medium	Instrument air free from corrosive substances or nitrogen
	Pressure	1.4 to 6 bar
Air consumption		≤80 l/h at 1.4 bar pilot supply in neutral position
		≤10 l/h at 1.4 bar pilot supply in operating position
Switching time		≤65 ms
Service life		≥2 x 10^7 switching cycles (at -20 to +80 °C)
		≥2 x 10^6 switching cycles (at -45 to +80 °C)
Mounting position		Any
Conformity		CE

Table 2: *Technical data · Electric*

Type 3963			**-X1**	**-X2**	**-X3**	**-06**	**-05**
Nominal signal		U_N	6 V DC, max. 27 V [1]	12 V DC, max. 25 V [1]	24 V DC, max. 32 V[1]	115 V AC, max. 130 V [1]	230 V AC, max. 255 V [1]
		f_n				48 to 62 Hz	
Switching point	ON	U_{+80}	≥4.8 V	≥9.6 V	≥18 V	82 to 130 V	183 to 255 V
		I_{+20}	≥1.41 mA	≥1.52 mA	≥1.57 mA	≥2.2 mA	≥2.6 mA
		P_{+20}	≥5.47 mW	≥13.5 mW	≥26.71 mW	≥0.17 VA	≥0.46 VA
	OFF	U_{-25}	≤1.0 V	≤2.4 V	≤4.7 V	≤18 V	≤36 V
Impedance		R_{+20}	2.6 KΩ	5.5 KΩ	10.7 KΩ	40 KΩ	80 KΩ
Effect of temperature			0.4 %/°C	0.2 %/°C	0.1 %/°C	0.05 %/°C	0.03 %/°C
Type of protection Ex ia IIC[2] for use in hazardous areas (Zone 1)							
Type 3963			-11	-12	-13		
Maximum values when connected to a certified intrinsically safe circuit							
Output voltage[4]		U_i	25 V · 27 V · 28 V · 30 V · 32 V				
Output current[4]		I_i	150 mA · 125 mA · 115 mA · 100 mA · 85 mA				
Power dissipation		P_i	250 mW	No restrictions			
Outer capacitance		C_i	Approx. 0				
Outer inductance		L_i	Approx. 0				
Ambient temperature in temperature class		T6	-45 to +60 °C				
		T5	-45 to +70 °C				
		T4	-45 to +80 °C				
Type of protection Ex nA II[3] for use in hazardous areas (Zone 2)							
Type 3963			-81	-82	-83		
Ambient temperature in temperature class		T6	-45 to +60 °C				
		T5	-45 to +70 °C				
		T4	-45 to +80 °C				

1) Maximum permissible value at 100 % duty cycle.
The maximum permissible value U_i applies to explosion-protected versions.

2) Type of protection II 2G Ex ia IIC T6 according to EC type examination certificate PTB 01 ATEX 2085

3) Type of protection II 3G Ex nA II T6 according to Statement of Conformity PTB 01 ATEX 2086 X

4) Pairs of values U_i/I_i apply to 6, 12, 24 V DC nominal signals.

Table 3: *Technical data · Pneumatic · Solenoid valves with single solenoid, K_{VS} 0.16 or 0.32*

Type 3963				
Switching function	3/2-way function	3/2-way function	5/2-way function	6/2-way function
K_{VS} coefficient[1)]	0.16	0.32	0.16	0.16
Safety function	SIL[3)], TÜV[4)]	SIL[3)], TÜV[4)]	SIL[3)], TÜV[4)]	-
Design	Diaphragm switching element, soft seated, with return spring			
Operating medium	Instrument air (free from corrosive substances)[5)], air containing oil or non-corrosive gases[6)]			
Operating pressure	1.4 to 6 bar			
Output signal	Operating pressure			
Permissible ambient temperature range[2)]	-45 to +80 °C			
Connection	G ¼ or ¼ NPT			
Approx. weight	0.57 kg (standard version)			

1) The air flow rate when p_1 = 2.4 bar and p_2 = 1.0 bar can be calculated using the following formula:
$Q = K_{VS} \times 36.22$ in m³/h.

2) The permissible ambient temperature of the solenoid valve depends on the permissible ambient temperature of the components, type of protection and temperature class.

3) SIL according to IEC 61508

4) Emergency release or locking of compressed air supply

5) With internal pilot supply

6) With external pilot supply

Table 4: *Technical data · Pneumatic · Solenoid valves with threaded connections, with single solenoid, K_{VS} 4.3*

Type 3963					
Switching function		3/2-way function	3/2-way function	5/2-way function[7]	6/2-way function[7]
K_{VS}[1] (direction of flow)		1.9 (4→3), 1.5 (3→4) 4.3 (3→5), 4.7 (5→3)			
Permissible ambient temperature range[2]		-20 to +80 °C	-45 to +80 °C	-20 to +80 °C	-20 to +80 °C
Safety approval		SIL[3], TÜV[4]	SIL[3], TÜV[4]	–	–
Design		Poppet valve with diaphragm actuator, soft seated, with return spring			
Material	Enclosure	Aluminum, powder coated, gray beige RAL 1019, 1.4404 (see 2.2 for special versions)			
	Diaphragm	Chloroprene rubber	Silicone rubber	Chloroprene rubber	Chloroprene rubber
	Seals	Chloroprene rubber	Silicone rubber	Chloroprene rubber	Chloroprene rubber
	Screws	Stainless steel 1.4571			
Actuation		Single solenoid with a pilot valve, K_{VS} 0.16			
Operating medium		Instrument air free from corrosive substances or nitrogen[5] Instrument air (free from corrosive substances), air containing oil or non-corrosive gases[6]			
Max. operating pressure (direction of flow)		1.4 to 6 bar[5] or 10 bar[6] (4→3, 3→5) 2 bar (as required)	1.4 to 6 bar[5] or 10 bar[6] (4→3, 3→5) 2 bar (as required)	1.4 to 6 bar[5] or 10 bar[6] (as required) 2 bar (as required)	1.4 to 6 bar[5] or 10 bar[6] (as required) 2 bar (as required)
Switching cycles (operating pressure)		≥10^7 (6 bar) ≥10^6 (10 bar)	≥10^6 (6 bar) ≥10^5 (10 bar)	≥10^7 (6 bar) ≥10^6 (10 bar)	≥10^7 (6 bar) ≥10^6 (10 bar)
Connection		G ½ or ½ NPT			
Approx. weight		0.585 kg (standard version)		1.1 kg (standard version)	

1) The air flow rate when p_1 = 2.4 bar and p_2 = 1.0 bar can be calculated using the following formula:
$Q = K_{VS}$ x 36.22 in m³/h.

2) The permissible ambient temperature of the solenoid valve depends on the permissible ambient temperature of the components, type of protection and temperature class.

3) SIL according to IEC 61508

4) Emergency release or locking of compressed air supply

5) With internal pilot supply

6) With external pilot supply

7) Connecting hose between booster valves made of polyamide, see Fig. 9 and Fig. 10

Table 5: *Technical data · Pneumatic · Solenoid valves with NAMUR interface, with single solenoid, K_{VS} 2.0 or 4.3*

Type 3963					
Switching function		3/2-way function			
K_{VS} [1] (direction of flow)		1.1 (4→3), 2.0 (3→5)		1.9 (4→3), 4.3 (3→5)	
Ambient temperature range[2]		-20 to +80 °C	-45 to +80 °C	-20 to +80 °C	-20 to +80 °C
Safety function		SIL[3], TÜV[4]	SIL[3], TÜV[4]	SIL[3], TÜV[4]	SIL[3], TÜV[4]
Design		Poppet valve with diaphragm actuator, soft seated, with return spring			
Material	Enclosure	Aluminum, powder coated, gray beige RAL 1019 or Ematal coating (depending on the version) Stainless steel 1.4404 (special versions) See Chapter 2.2.			
	Diaphragm	Chloroprene rubber	Silicone rubber	Chloroprene rubber	Silicone rubber
	Seals	Chloroprene rubber	Silicone rubber	Chloroprene rubber	Silicone rubber
	Screws	Stainless steel 1.4571			
Actuation		Single solenoid with a pilot valve, K_{VS} 0.16			
Operating medium		Instrument air free from corrosive substances or nitrogen[5] Instrument air (free from corrosive substances), air containing oil or non-corrosive gases[6]			
Max. operating pressure		2.7 to 6 bar[5] or 10 bar[6]			
Switching cycles (operating pressure)		≥10^7 (6 bar) ≥10^6 (10 bar)	≥10^6 (6 bar) ≥10^5 (10 bar)	≥10^7 (6 bar) ≥10^6 (10 bar)	≥10^7 (6 bar) ≥10^5 (10 bar)
Connection	Supply air	G ¼ or ¼ NPT, NAMUR interface ¼"[7], G ⅜		G ½ or ½ NPT, NAMUR interface ½"[7]⅜	
	Exhaust air	G ½ or ½ NPT, NAMUR interface ½"[7], G ⅜		G ½ or ½ NPT, NAMUR interface ½"[7]⅜	
Approx. weight		1.38 kg (standard version)		1.5 kg (standard version)	

1) The air flow rate when p_1 = 2.4 bar and p_2 = 1.0 bar can be calculated using the following formula: $Q = K_{VS} \times 36.22$ in m^3/h.

2) The permissible ambient temperature of the solenoid valve depends on the permissible ambient temperature of the components, type of protection and temperature class.

3) SIL according to IEC 61508

4) Emergency release or locking of compressed air supply

5) With internal pilot supply

6) With external pilot supply

7) NAMUR interface according to VDI/VDE 3845

Table 6: *Technical data · Pneumatic · Solenoid valves with single solenoid, K_{VS} 1.4 or 2.9*

Type 3963			
Switching function		3/2-way function with exhaust air feedback	5/2-way function
K_{VS} coefficient[1]		1.4 or 2.9	
Safety function		TÜV[2] (with K_{VS} 1.4)	
Design		Spool, metal-to-metal seat, zero overlap, with return spring	
Material	Enclosure	Aluminum, powder coated, gray beige RAL 1019 1.4404 (see Chapter 2.2 for special versions)	
	Seals	Silicone	
	Filter	Polyethylene	
	Screws	Stainless steel 1.4571	
Actuation		Single solenoid with a pilot valve, K_{VS} 0.01 (with 1.4) or K_{VS} 0.16 (with 2.9)	
Operating medium		Instrument air free from corrosive substances or nitrogen[3] Instrument air (free from corrosive substances), air containing oil or non-corrosive gases[4]	
Max. operating pressure		6 bar[3] or 10 bar[4]	
Ambient temperature range[5]		-45 to +80 °C	
Switching cycles		≥2 x 10^7	
Connection	K_{VS} 1.4	G ¼ or ¼ NPT, NAMUR interface[6]	
	K_{VS} 2.9	G ½ or ½ NPT, NAMUR interface[6]	
Approx. weight	K_{VS} 1.4	0.485 kg (standard version)	
	K_{VS} 2.9	1.76 kg (standard version)	

1) The air flow rate when p_1 = 2.4 bar and p_2 = 1.0 bar can be calculated using the following formula:
$Q = K_{VS}$ x 36.22 in m^3/h.

2) Emergency release or locking of compressed air supply

3) With internal pilot supply

4) With external pilot supply

5) The permissible ambient temperature of the solenoid valve depends on the permissible ambient temperature of the components, type of protection and temperature class.

6) NAMUR interface according to VDI/VDE 3845

Table 7: *Technical data · Pneumatic · Solenoid valves with double solenoid, K_{VS} 1.4 or 2.9*

Type 3963				
Switching function		5/2-way function with two detent positions	5/3-way function with spring-centered mid-position (ports 2 and 4 closed)	5/3-way function with spring-centered mid-position (ports 2 and 4 vented)
K_{VS} coefficient[1]		1.4 or 2.9	1.4 (2.9 on request)	1.4 (2.9 on request)
Safety function		TÜV[2] (with K_{VS} 1.4)	–	TÜV[2] (with K_{VS} 1.4)
Design		Spool, metal-to-metal seat, zero overlap		
Material	Enclosure	Aluminum, powder coated, gray beige RAL 1019 1.4404 (see Chapter 2.2 for special versions)		
	Seals	Silicone		
	Filter	Polyethylene		
	Screws	Stainless steel 1.4571		
Actuation		Double solenoid with two pilot valves, K_{VS} 0.01 (with 1.4) or K_{VS} 0.16 (with 2.9)		
Operating medium		Instrument air (free from corrosive substances) or nitrogen [3], Instrument air (free from corrosive substances), air containing oil or non-corrosive gases[4]		
Max. operating pressure		6 bar[3] or 10 bar[4]		
Ambient temperature range[5]		-45 to +80 °C		
Switching cycles		≥2 x 10^7		
Connection	K_{VS} 1.4	G ¼ or ¼ NPT, NAMUR interface[6]		
	K_{VS} 2.9	G ½ or ½ NPT, NAMUR interface[6]		
Approx. weight	K_{VS} 1.4	0.685 kg (standard version)		
	K_{VS} 2.9	2.18 kg (standard version)		

1) The air flow rate when p_1 = 2.4 bar and p_2 = 1.0 bar can be calculated using the following formula:
$Q = K_{VS}$ x 36.22 in m^3/h.

2) Emergency release or locking of compressed air supply

3) With internal pilot supply

4) With external pilot supply

5) The permissible ambient temperature of the solenoid valve depends on the permissible ambient temperature of the components, type of protection and temperature class.

6) NAMUR interface according to VDI/VDE 3845

3.2 Ex approvals

Type	Certificate			Type of protection/comments
3963-1	**NEPSI**	Number Date Valid until	GYJ23.1086X 2023-04-29 2028-04-28	Ex ia IIC T4...T6 Gb
	CCC Ex	Number Date Valid until	2021322307003631 2026-01-03 2031-01-02	Ex ia IIC T4...T6 Gb
	ATEX	Number Date	PTB 01 ATEX 2085 2019-11-18	II 2 G Ex ia IIC T6...T4 Gb
3963-3	**FM**	Number Date	FM24US0232 2025-01-02	IS Class I, II, III, Div. 1,GP A, B, C, D, E, F, G, T* Type 4X IS Class I, Zn 0, AEx ia IIC, T* T* = Temperature Class and Ambient Temperature Range per Dwg. Addendum to EB 3963 EN
3963-8	**ATEX**	Number Date	PTB 01 ATEX 2086 X 2014-04-17	II 3G Ex nA II T6 Gc II 3G Ex ic IIC T6 Gc

1) EC type examination certificate

2) Statement of conformity

3.3 Dimensions

Solenoid valves without threaded connections

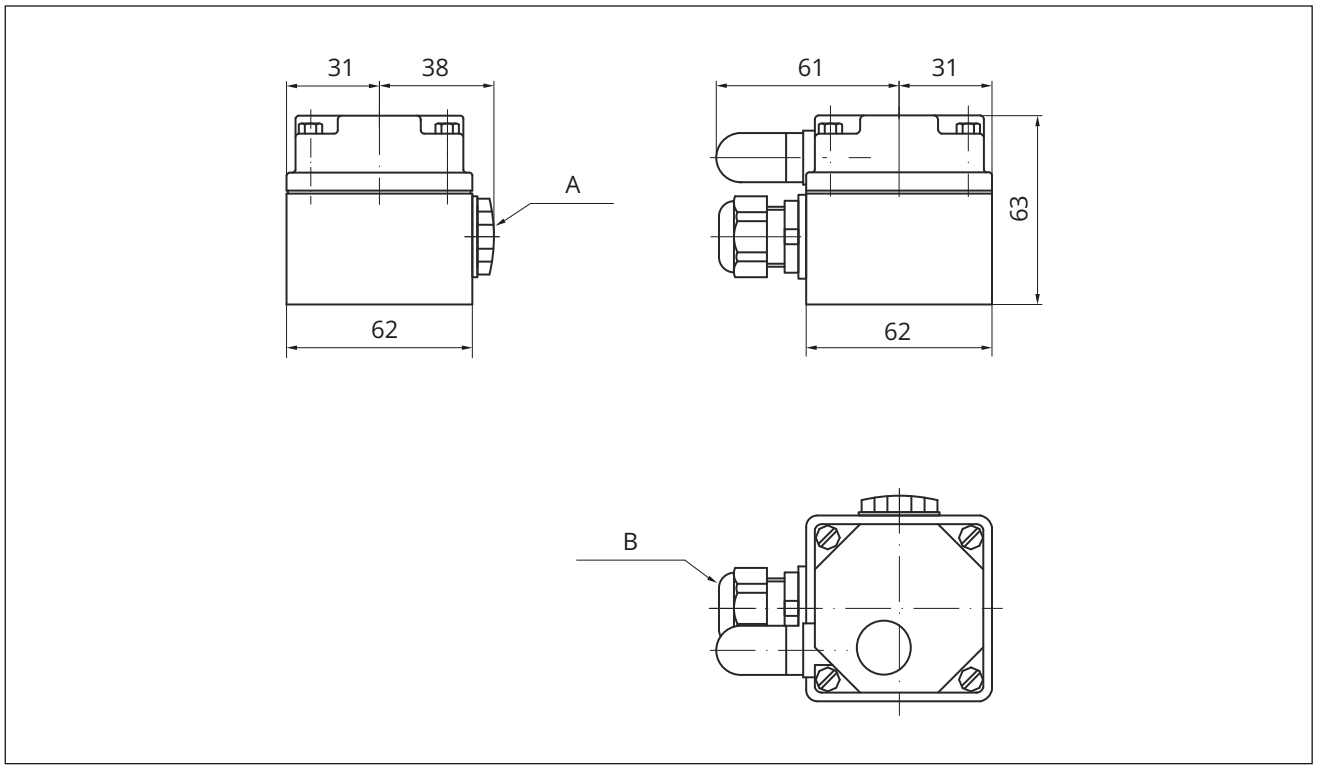

Fig. 2: *Dimensions in mm · Type 3963-xxx0x4541: Pilot valve, K_{VS} 0.01*

A M20x1.5 screw plug
B M20x1.5 cable gland

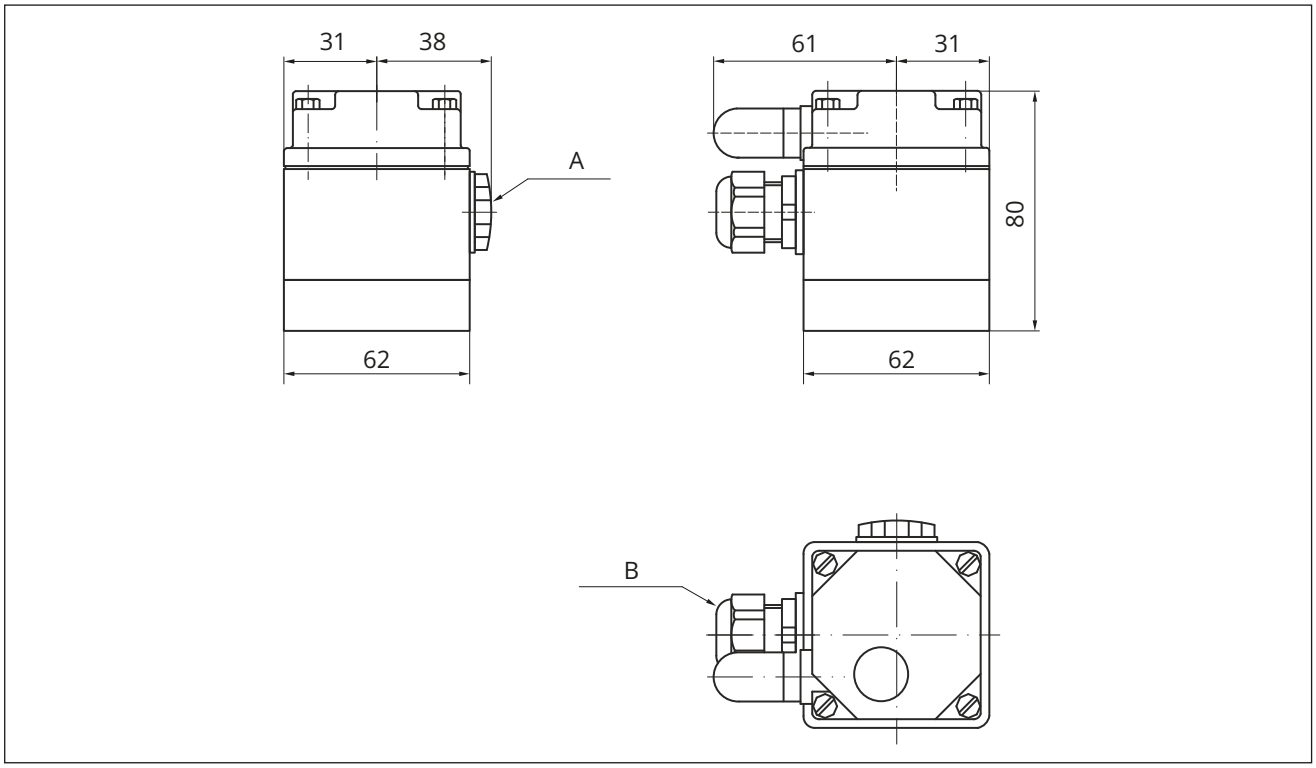

Fig. 3: *Dimensions in mm · Type 3963-xxx0x414: Pilot valve, K_{VS} 0.16*

A M20x1.5 screw plug
B M20x1.5 cable gland

Solenoid valves with threaded connections

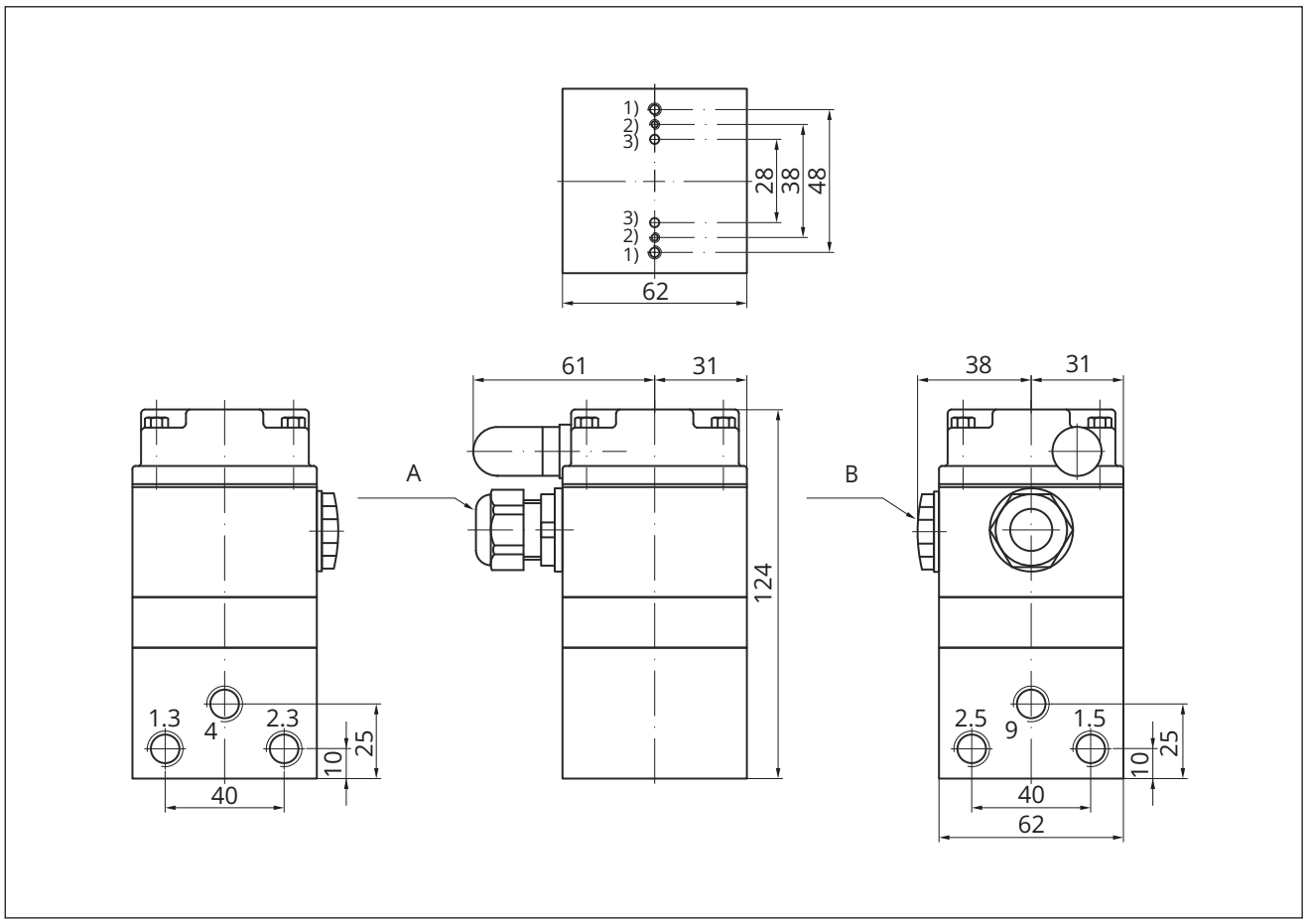

Fig. 4: *Dimensions in mm · Type 3963-xxx1x11: 5/2-way solenoid valve, single controlled, K_{VS} 0.16*

A M20x1.5 cable gland

B M20x1.5 screw plug

Bottom view of connecting plate

[1] M4/7 mm deep

[2] M3/6 mm deep

[3] Ø 3 mm/3.5 mm deep

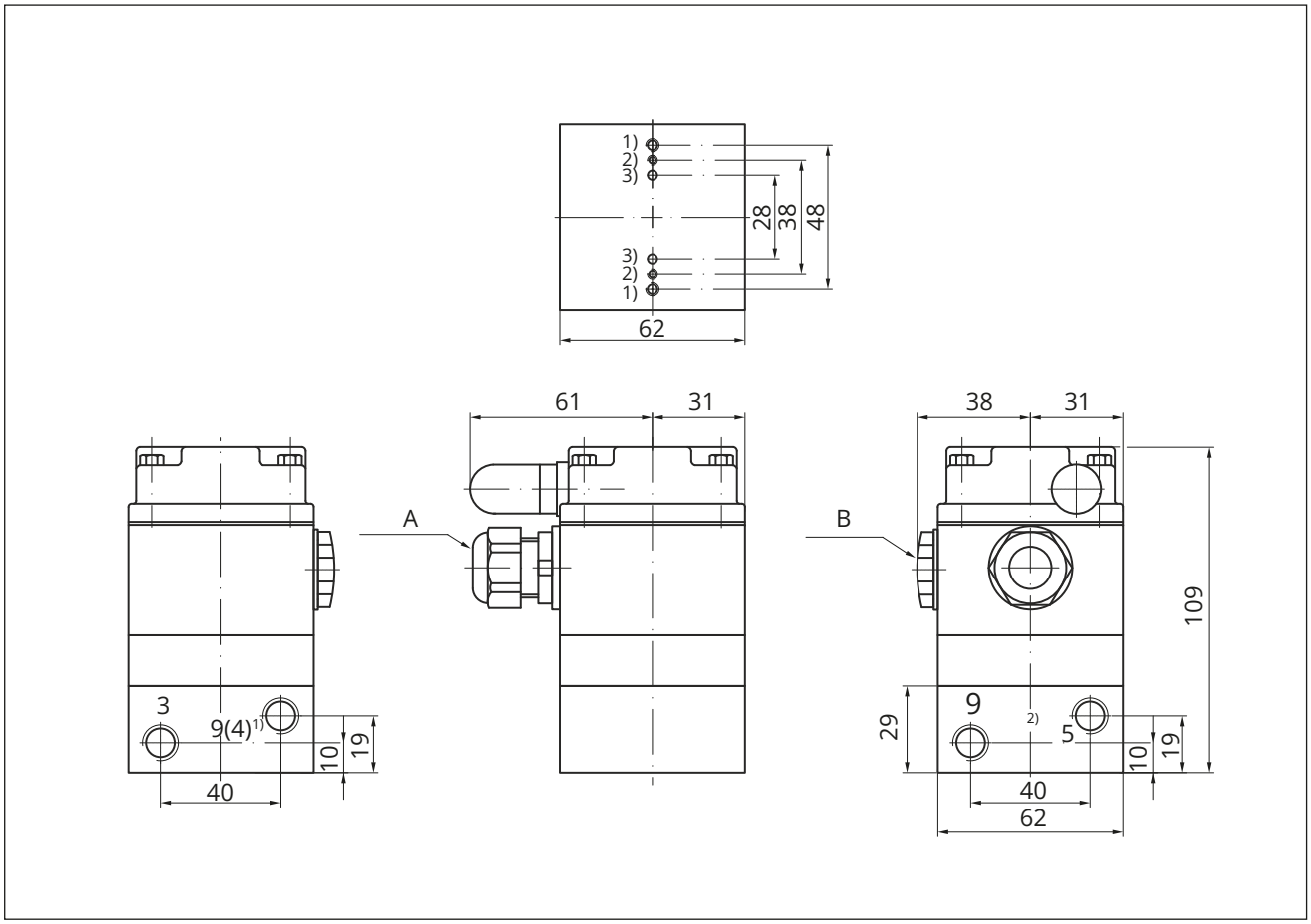

Fig. 5: *Dimensions in mm · Types 3963-xxx0x11/-xxx0x12: 3/2-way solenoid valve, single controlled, K_{VS} 0.16 or 3.2*

A M20x1.5 cable gland

B M20x1.5 screw plug

4) Port 9 in Type 3963-xxx0x11x0xxxx
Port 4 in Type 3963-xxx0x12xxxxxx

5) Ports 9 and 5 in Type 3963-xxx0x12xxxxxx

Bottom view of connecting plate

1) M4/7 mm deep

2) M3/6 mm deep

3) Ø 3 mm/3.5 mm deep

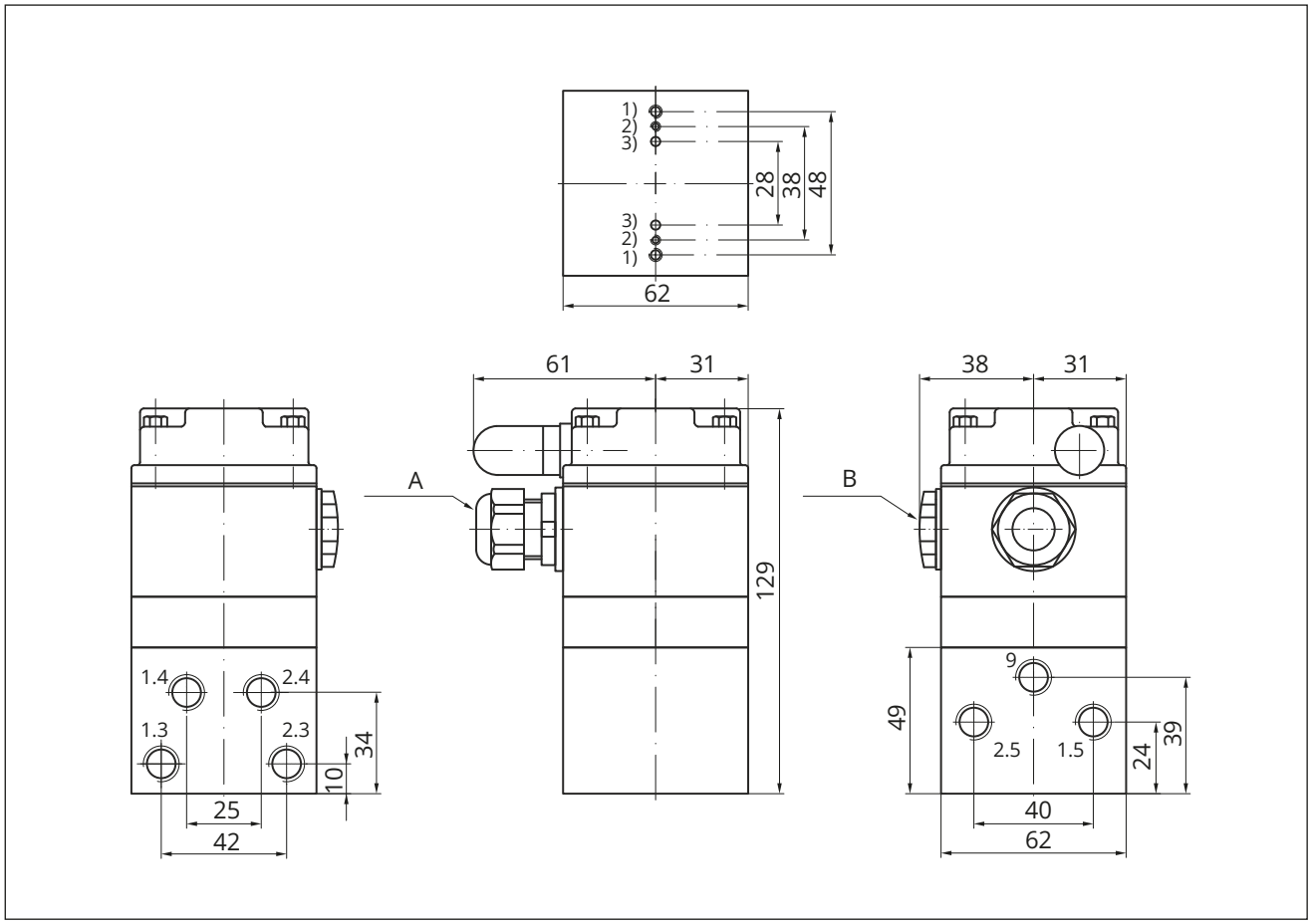

Fig. 6: *Dimensions in mm · Type 3963-xxx8x11: 6/2-way solenoid valve, single controlled, K_{VS} 0.16*

A M20x1.5 cable gland

B M20x1.5 screw plug

Bottom view of connecting plate

[1] M4/7 mm deep

[2] M3/6 mm deep

[3] Ø 3 mm/3.5 mm deep

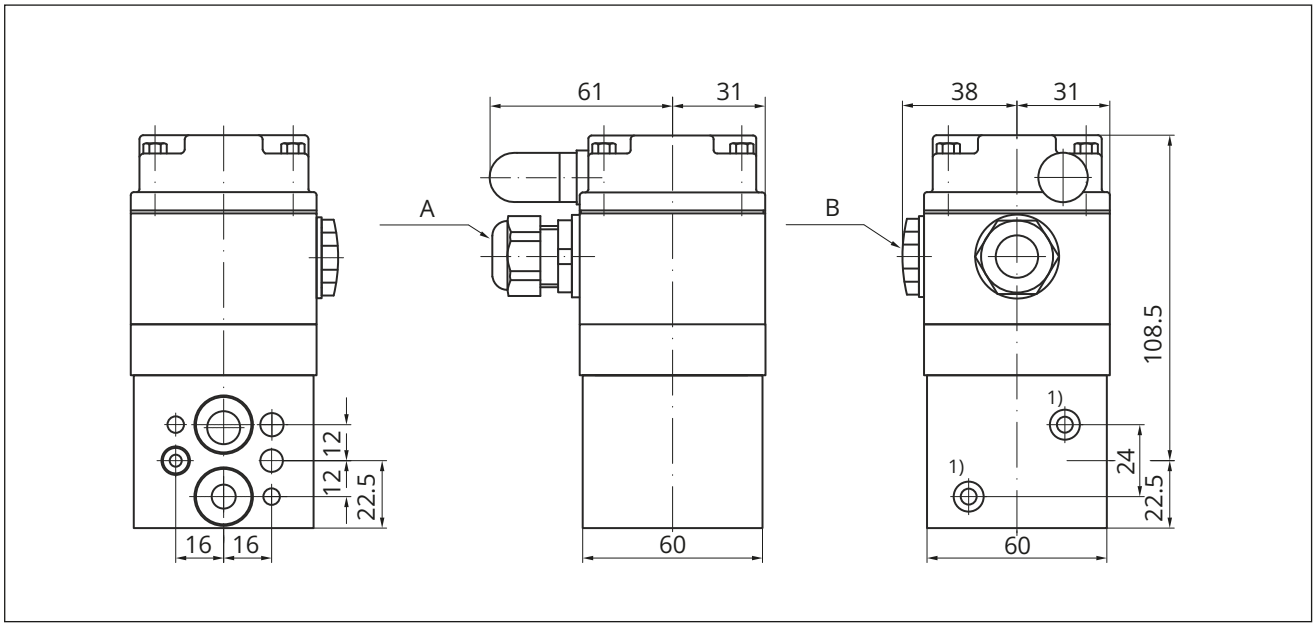

Fig. 7: *Dimensions in mm · Types 3963-xxx0x314/-xxx0x324: 3/2-way solenoid valve, single controlled, K_{VS} 0.16 or 0.32, for mounting to linear actuators using a mounting block*

A M20x1.5 cable gland

B M20x1.5 screw plug

1) * Mounting to a mounting block using two M5x60 (DIN 912) screws

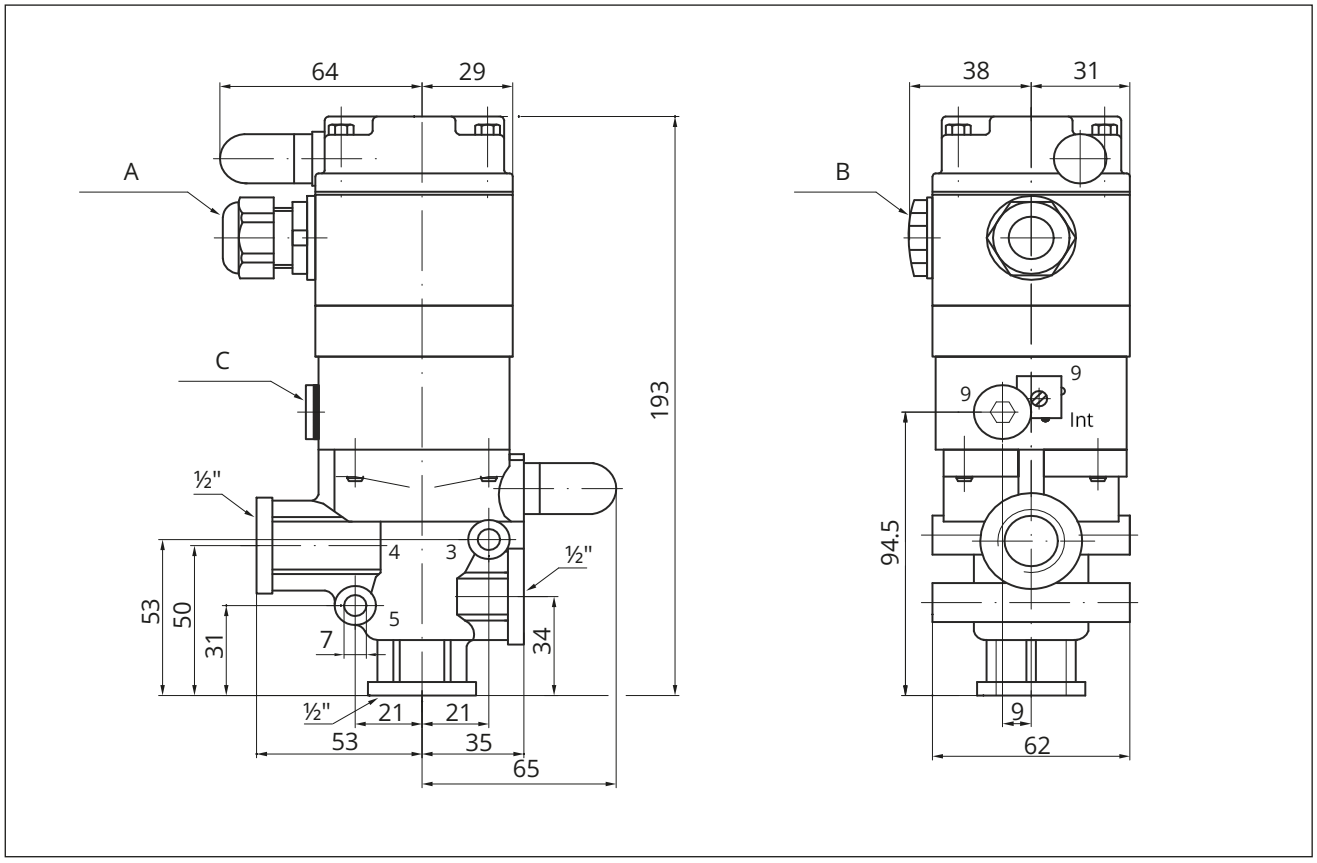

Fig. 8: *Dimensions in mm · Type 3963-xxx0x14: 3/2-way solenoid valve, single controlled, K_{VS} 4.3*

A M20x1.5 cable gland
B M20x1.5 screw plug
C G ¼ blanking plug

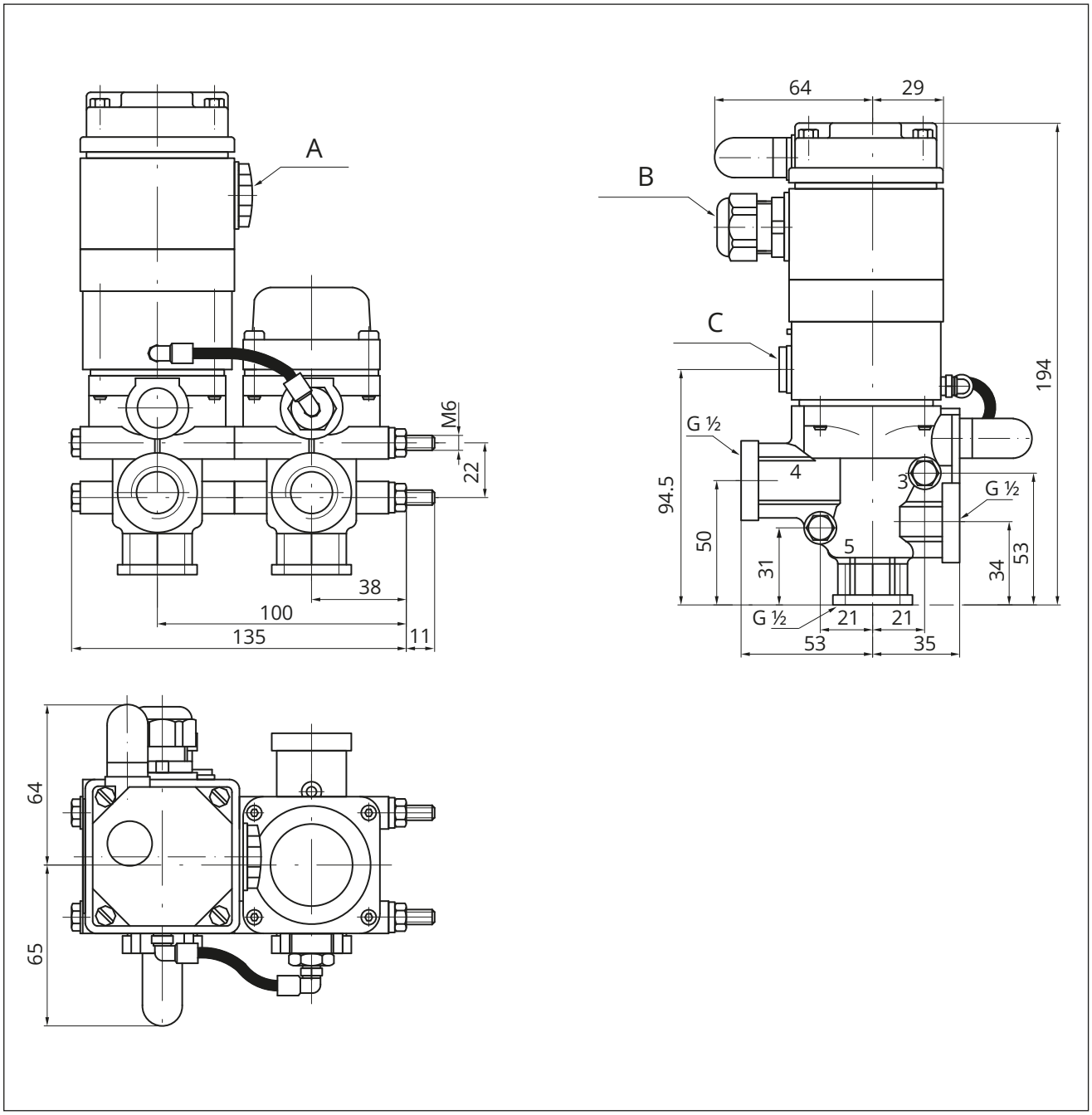

Fig. 9: *Dimensions in mm · Type 3963-xxx1x14: 5/2-way solenoid valve, single controlled, K_{VS} 4.3*

A M20x1.5 screw plug
B M20x1.5 cable gland
C G ¼ blanking plug

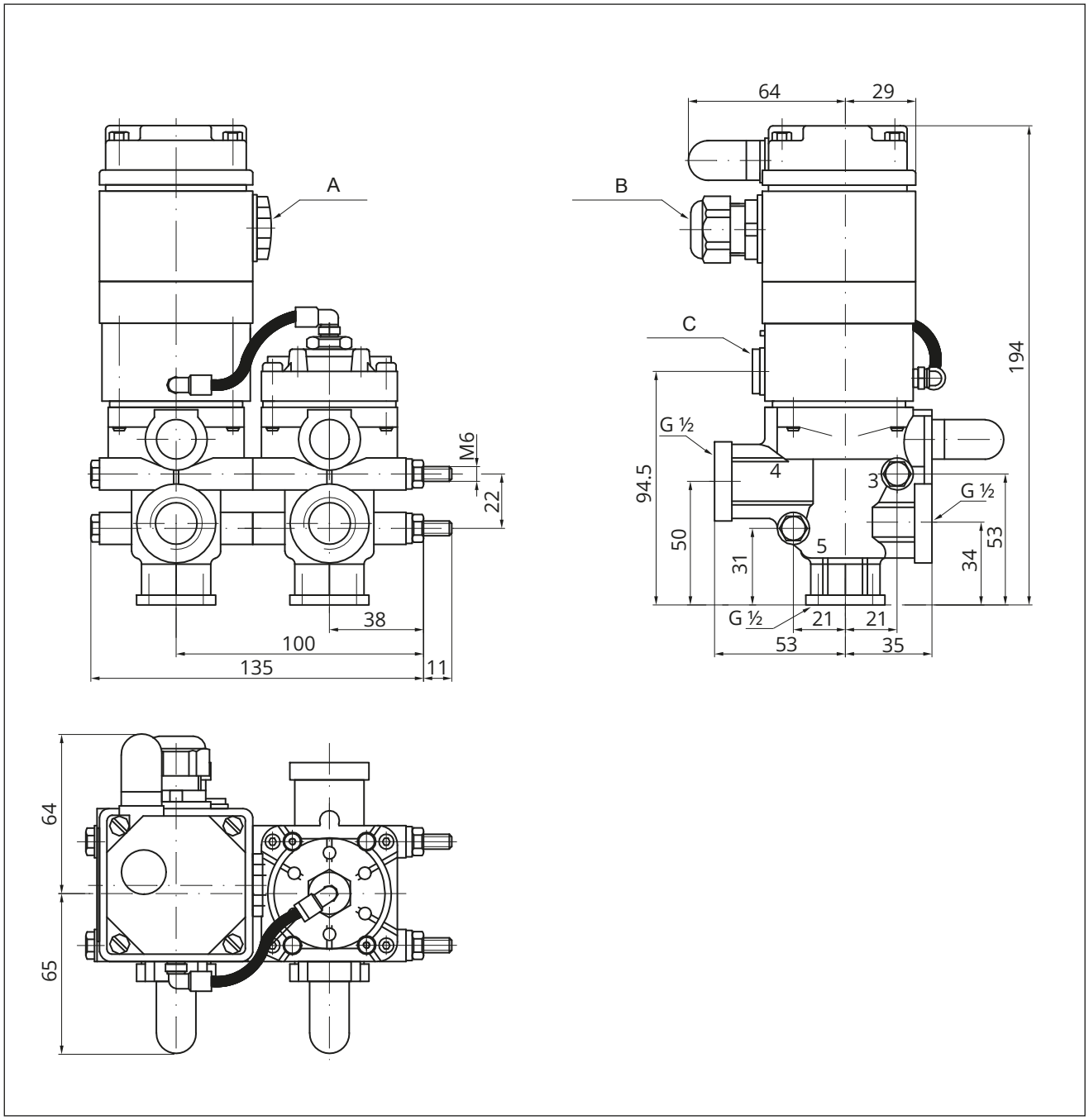

Fig. 10: *Dimensions in mm · Type 3963-xxx8x14x1: 6/2-way solenoid valve, single controlled K_{VS} 4.3*

A M20x1.5 screw plug
B M20x1.5 cable gland
C G ¼ blanking plug

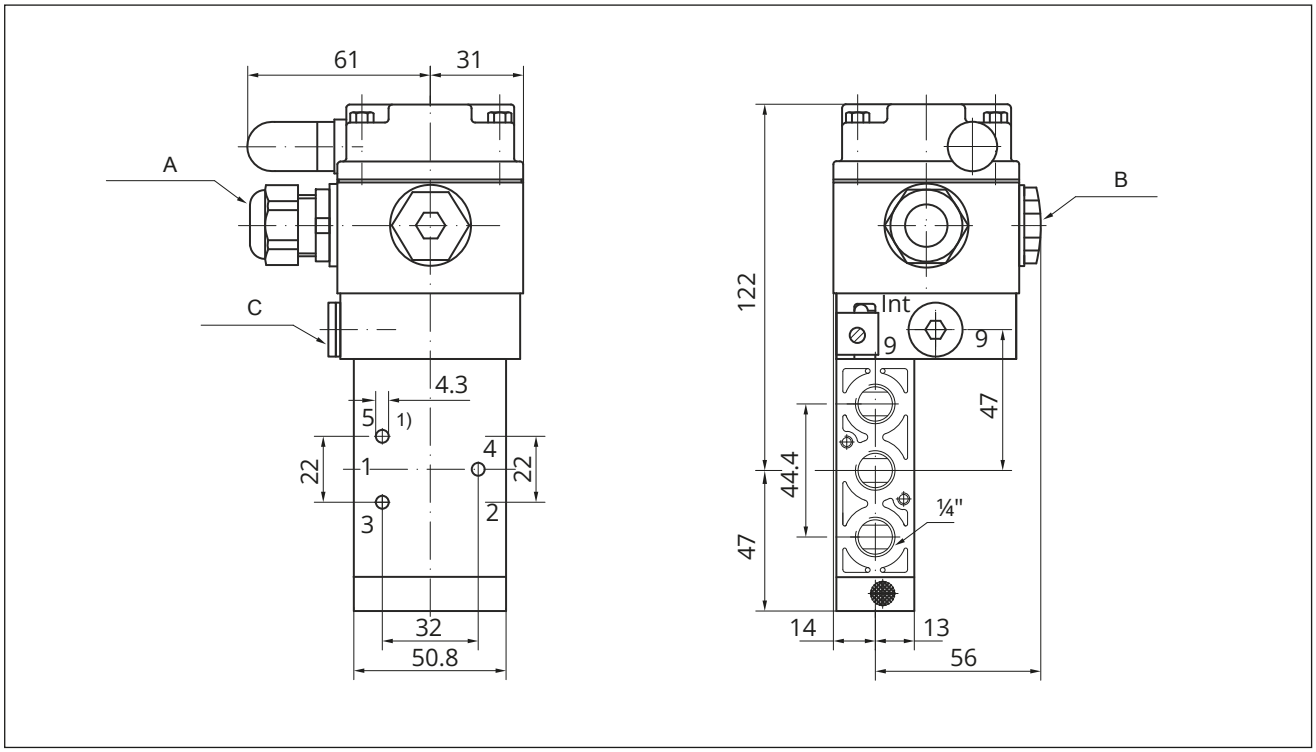

Fig. 11: *Dimensions in mm · Type 3963-xxx0x13/-xxx1x13: 3/2- or 5/2-way solenoid valve, single controlled K_{VS} 1.4*

A M20x1.5 cable gland

B M20x1.5 screw plug

C G ¼ blanking plug

1) Port 5 sealed when the 3/2-way function is used

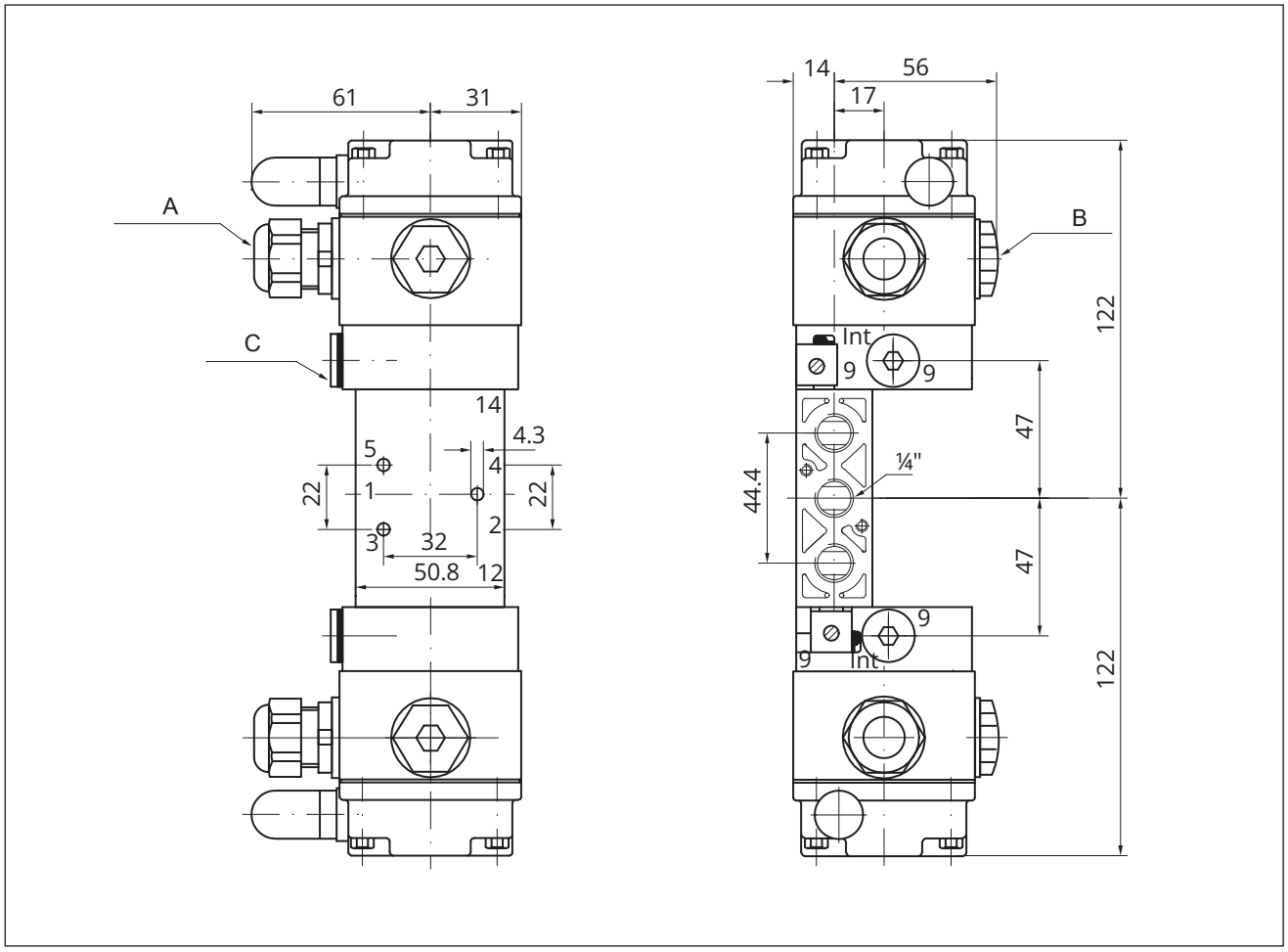

Fig. 12: *Dimensions in mm · Types 3963-xxx2x13/-xxx3x13/-xxx5x13: 5/2-way or 5/3-way solenoid valve, double controlled, K_{VS} 1.4*

A M20x1.5 cable gland
B M20x1.5 screw plug
C G ¼ blanking plug

Solenoid valves with threaded connections for linear actuators with NAMUR rib

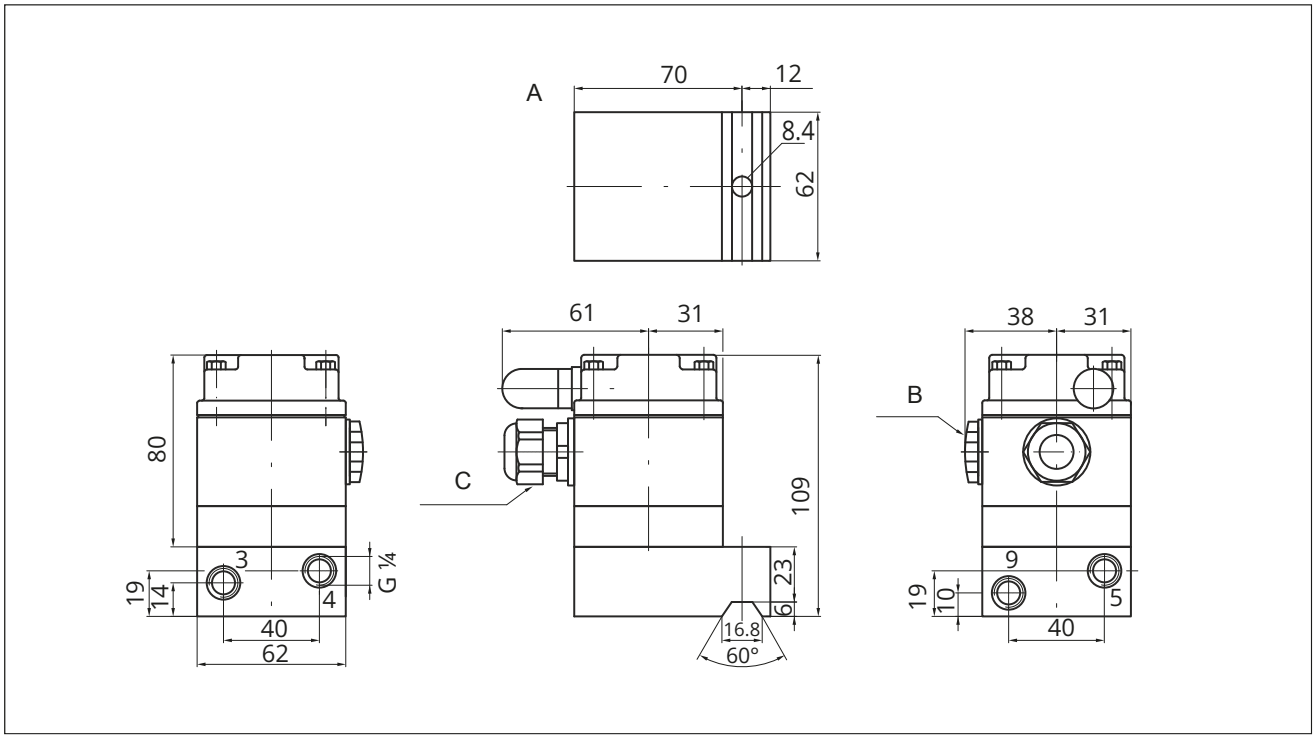

Fig. 13: *Dimensions in mm · Type 3963-xxx0x22: 3/2-way solenoid valve, single controlled, K_{VS} 0.32*

A Bottom view of adapter plate

B M20x1.5 screw plug

C M20x1.5 cable gland

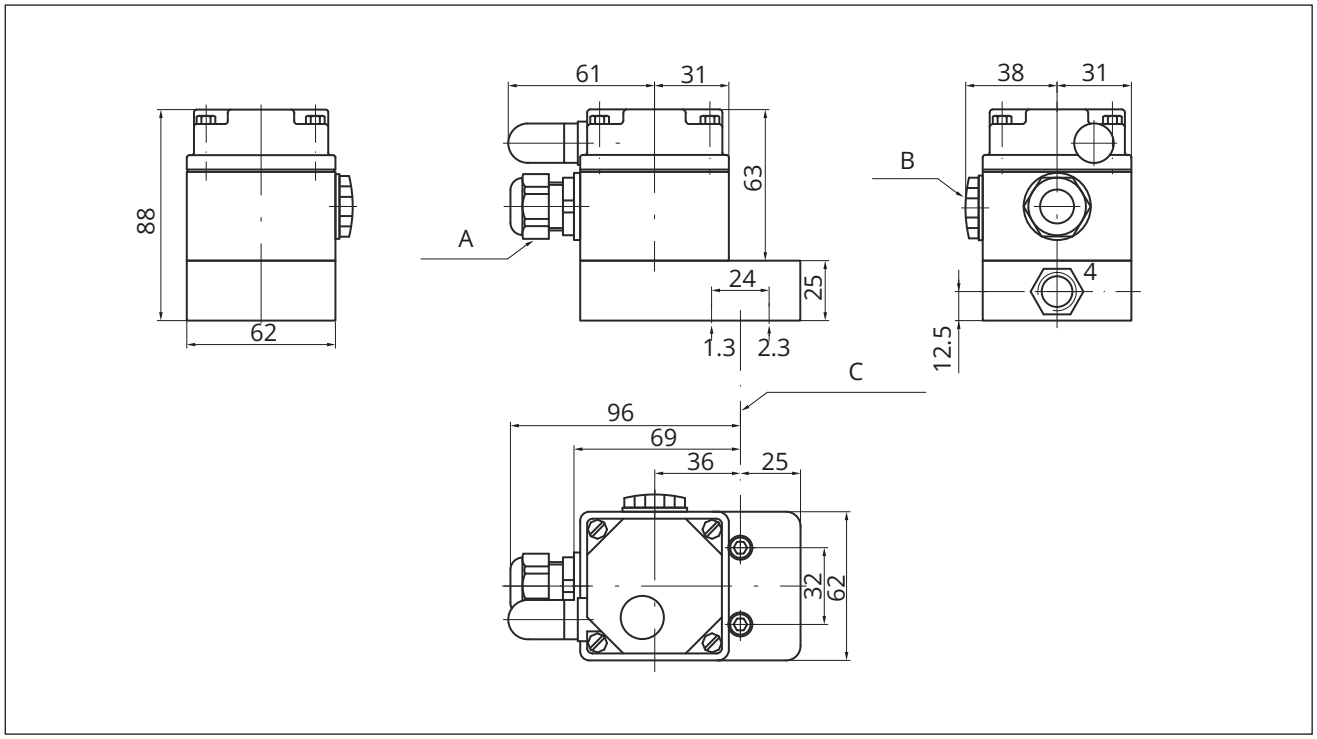

Fig. 14: *Dimensions in mm · Type 3963-xxx0x01/-xxx1x01: 3/2- or 5/2-way solenoid valve, single controlled K_{VS} 0.16*

A M20x1.5 cable gland
B M20x1.5 screw plug
C NAMUR fixing level

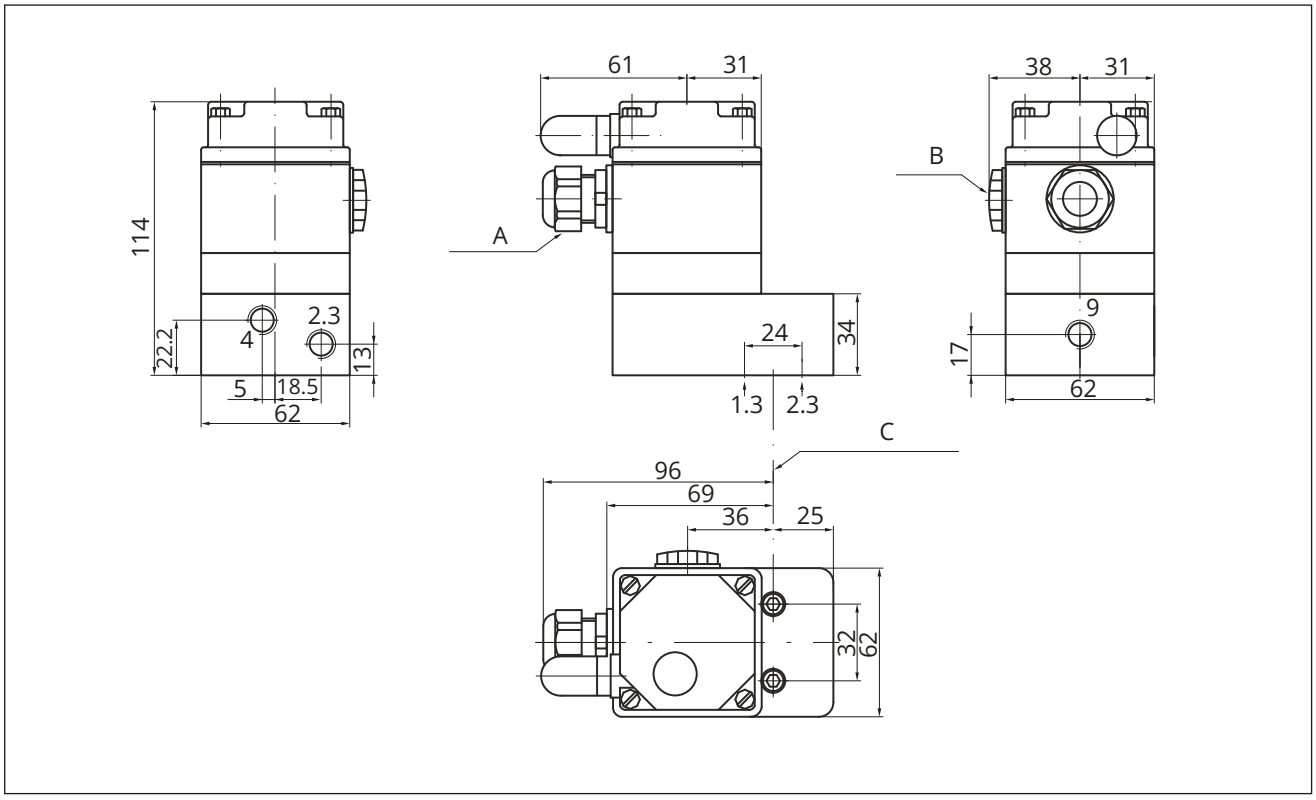

Fig. 15: *Dimensions in mm · Type 3963-xxx0x02: 3/2-way solenoid valve, single controlled, K_{VS} 0.32*

A M20x1.5 cable gland
B M20x1.5 screw plug
C NAMUR fixing level

Solenoid valves with NAMUR interface for rotary actuators

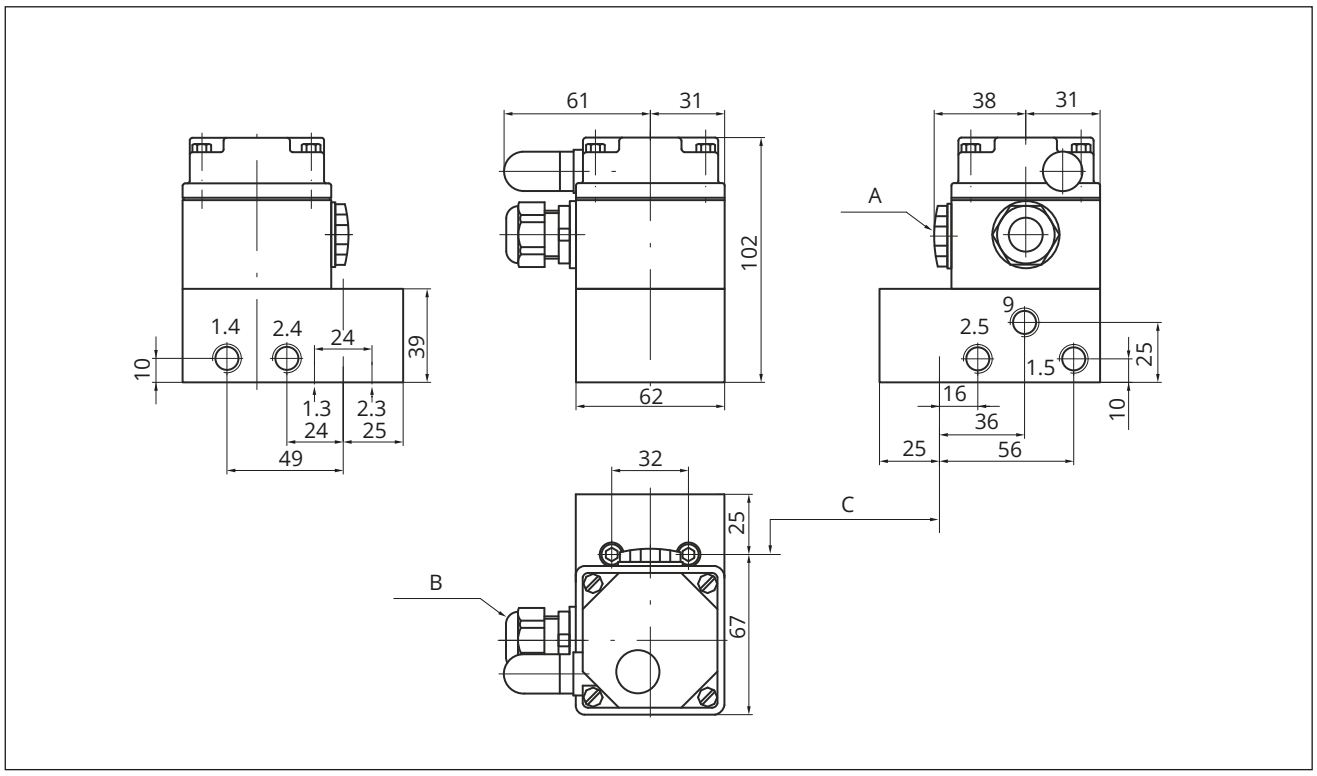

Fig. 16: *Dimensions in mm · Type 3963-xxx8x01: 6/2-way solenoid valve, single controlled, K_{VS} 0.16*

A M20x1.5 screw plug
B M20x1.5 cable gland
C NAMUR fixing level

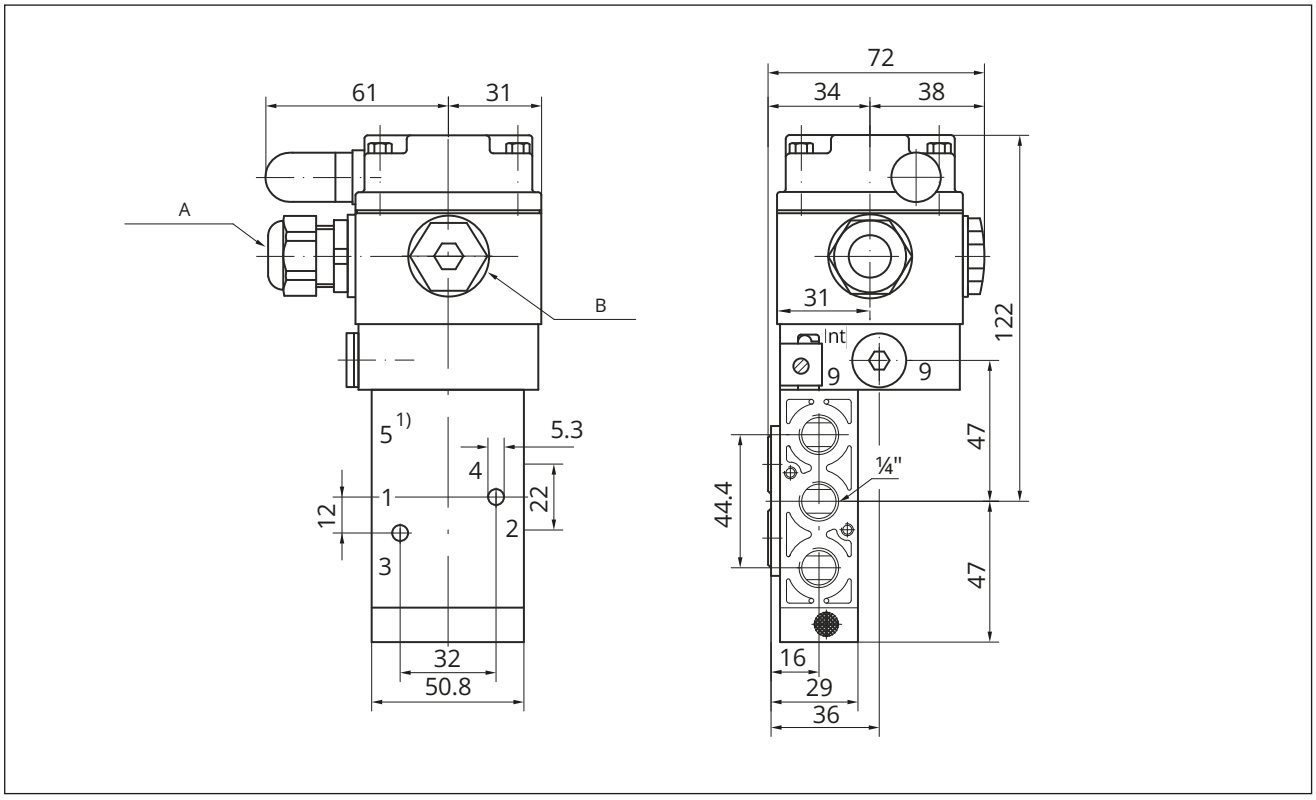

Fig. 17: *Dimensions in mm · Type 3963-xxx0x03/-xxx1x03: 3/2- or 5/2-way solenoid valve, single controlled K_{VS} 1.4*

A M20x1.5 cable gland

B M20x1.5 screw plug

1) Port 5 sealed when the 3/2-way function is used

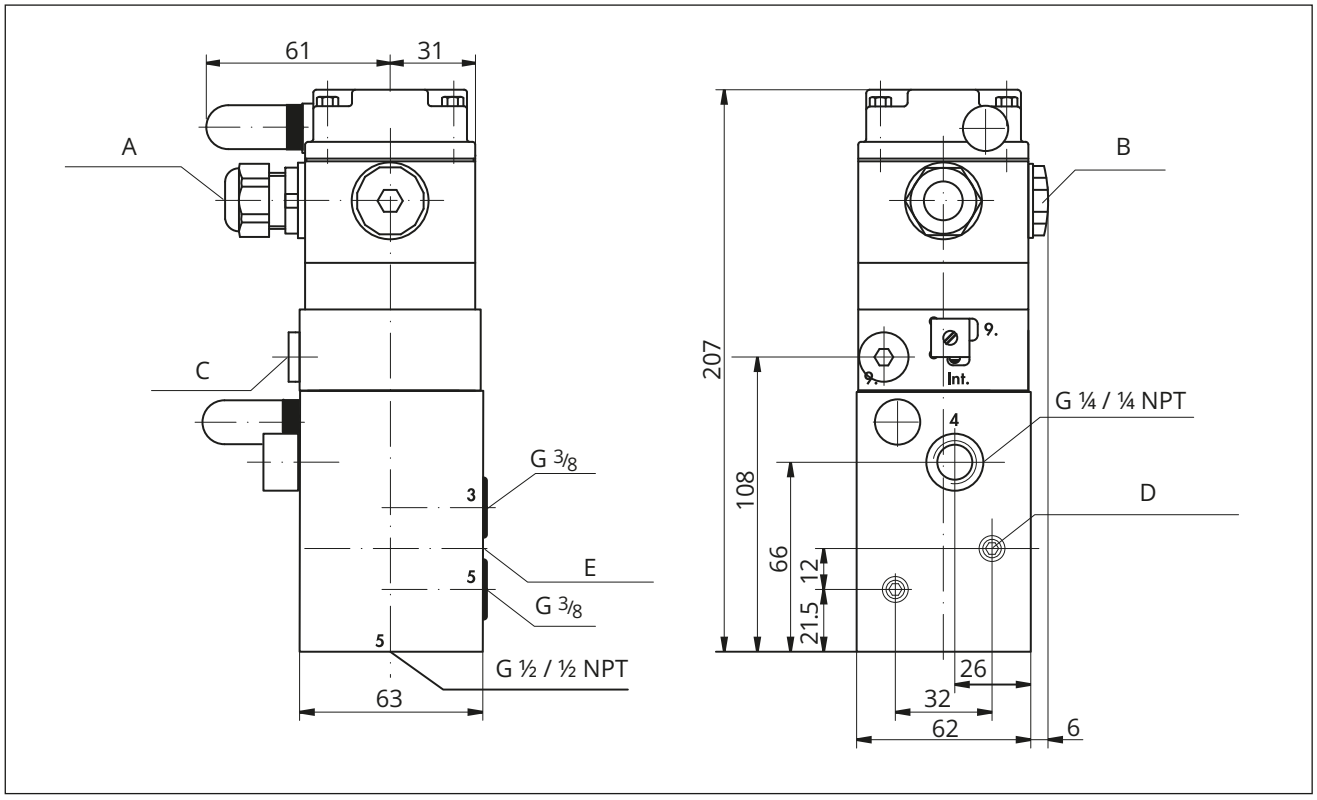

Fig. 18: *Dimensions in mm · Type 3963-xxx0x07: 3/2-way solenoid valve, single controlled, K_{VS} 2.0*

A M20x1.5 cable gland
B M20x1.5 screw plug
C G ¼ blanking plug
D Cap screw ISO 4762, M6x60 with spring washer, DIN 128, A5
E NAMUR interface G ¼

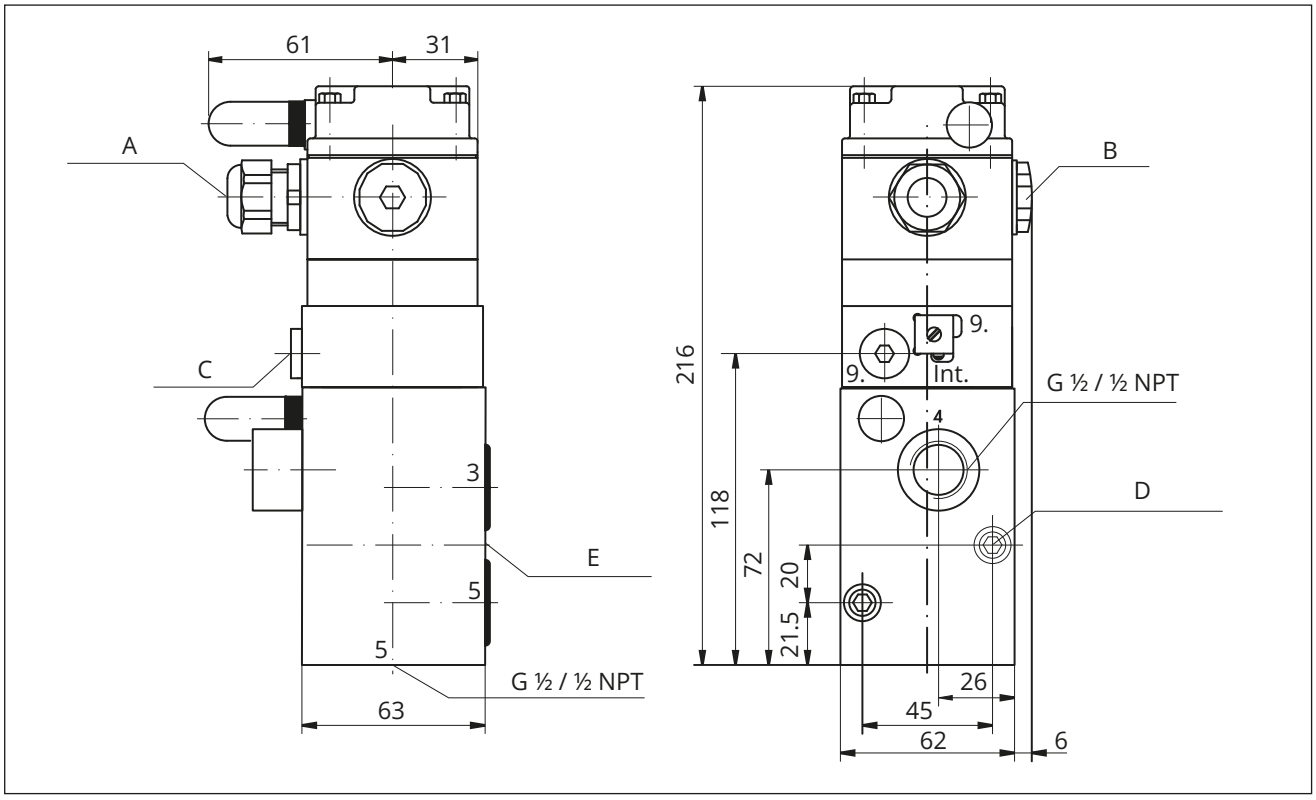

Fig. 19: *Dimensions in mm · Type 3963-xxx0x04: 3/2-way solenoid valve, single controlled, K_{VS} 4.3*

A M20x1.5 cable gland
B M20x1.5 screw plug
C G ¼ blanking plug
D Cap screw ISO 4762, M6x60 with spring washer, DIN 128, A6
E NAMUR interface G ½

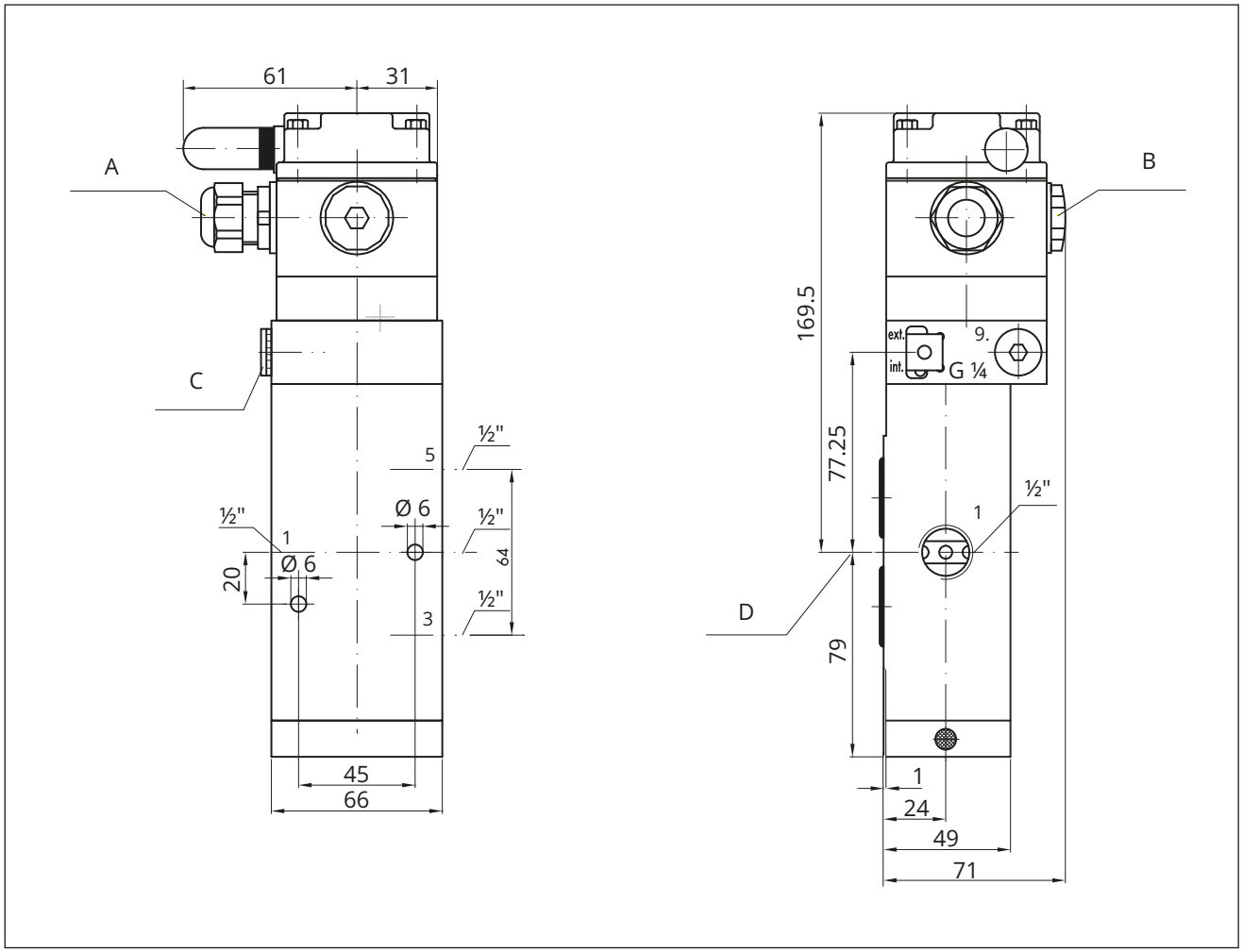

Fig. 20: *Dimensions in mm · Type 3963-xxx1x06: 5/2-way solenoid valve, single controlled, K_{VS} 2.9*

A M20x1.5 cable gland
B M20x1.5 screw plug
C G ¼ blanking plug
D NAMUR interface

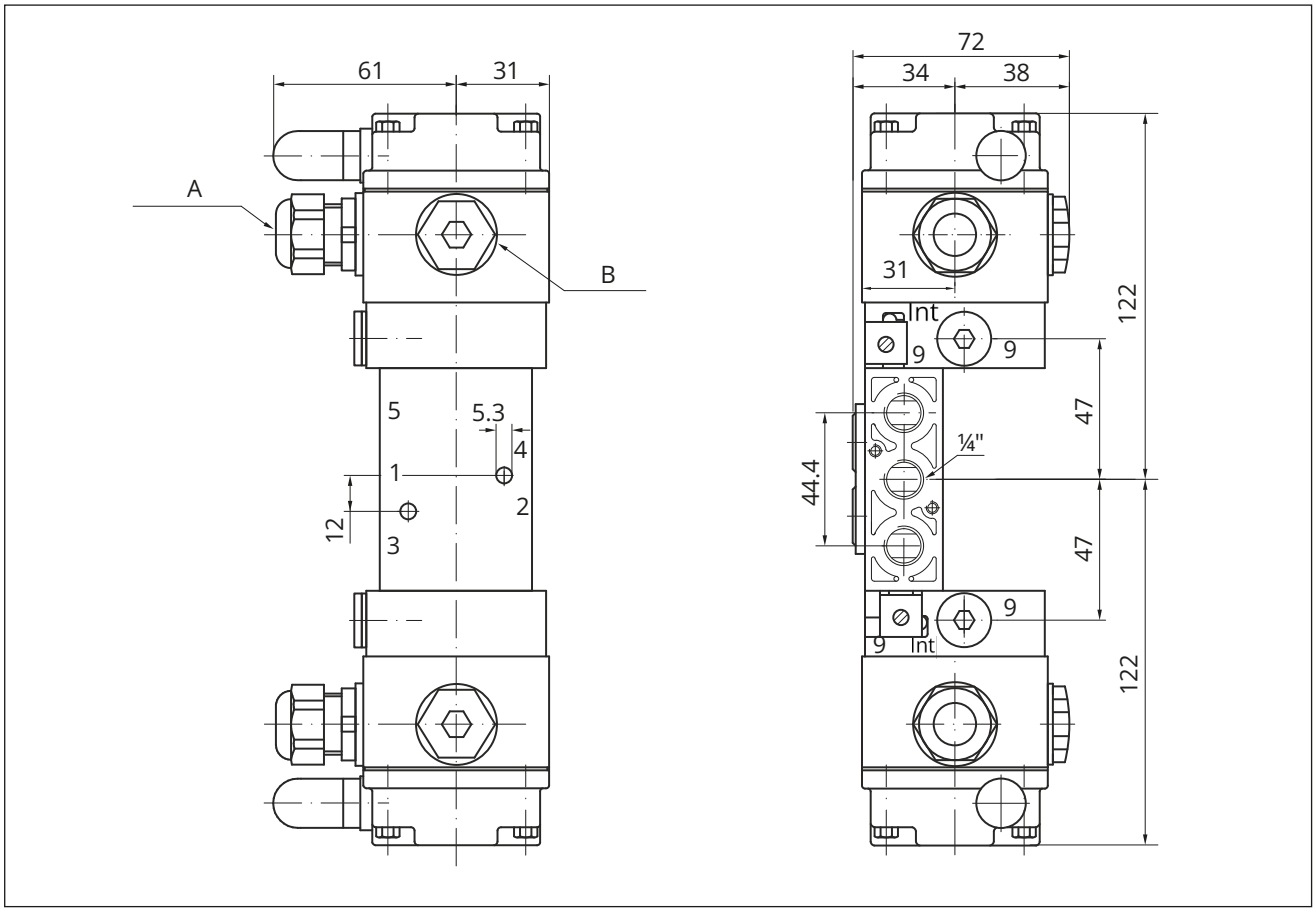

Fig. 21: *Dimensions in mm · Types 3963-xxx2x03/-xxx3x03/-xxx5x05: 5/2-way or 5/3-way solenoid valve, double controlled, K_{VS} 1.4*

A M20x1.5 cable gland

B M20x1.5 screw plug

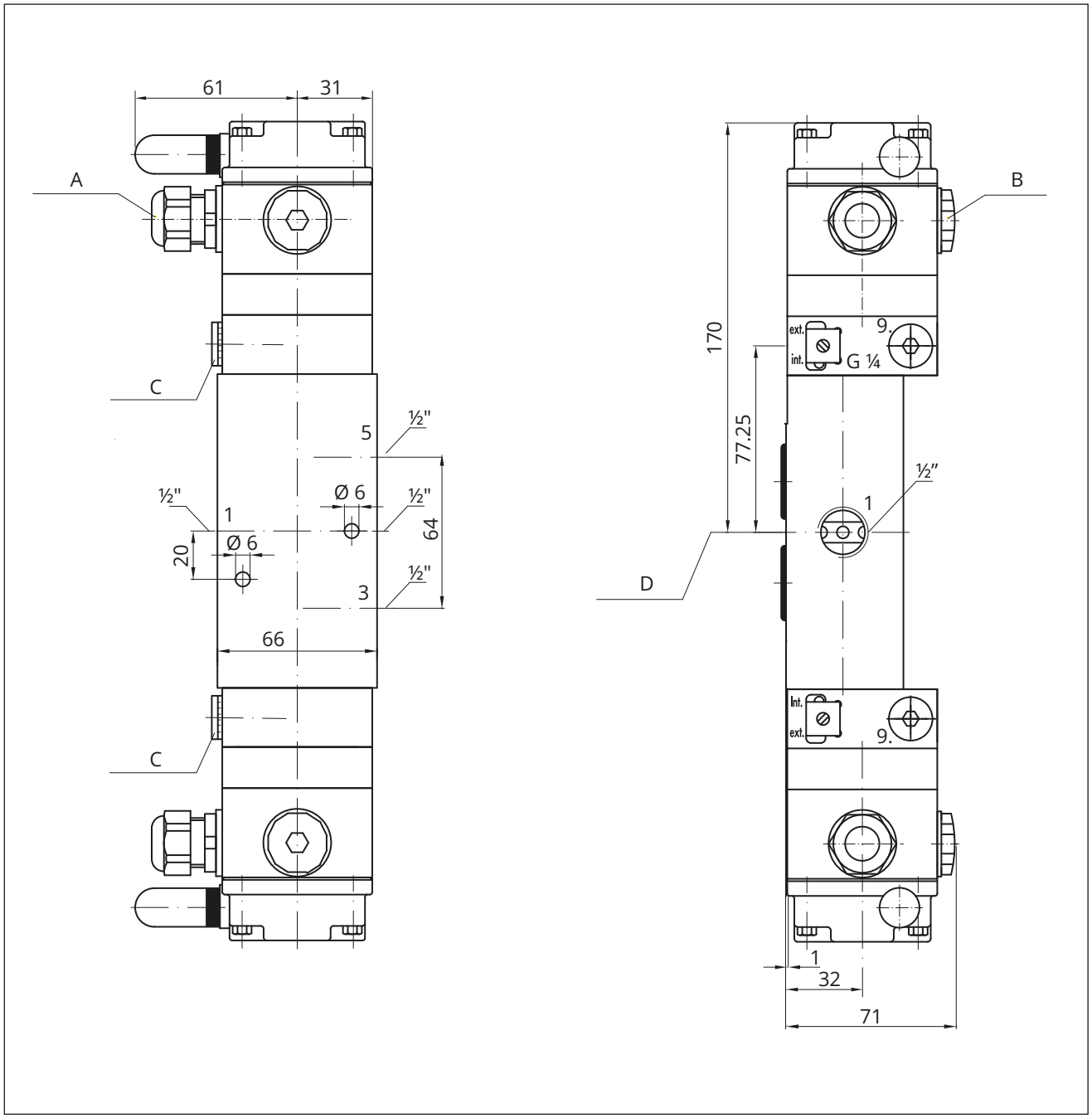

Fig. 22: *Dimensions in mm · Type 3963-xxx2x06: 5/2-way solenoid valve, double controlled, K_{VS} 2.9*

A M20x1.5 cable gland
B M20x1.5 screw plug
C G ¼ blanking plug
D NAMUR interface

4 Shipment and on-site transport

The work described in this chapter is to be performed only by personnel appropriately qualified to carry out such tasks.

4.1 Accepting the delivered goods

After receiving the shipment, proceed as follows:

1. Compare the shipment received with the delivery note.
2. Check the shipment for transportation damage. Report any damage to SAMSON and the forwarding agent (refer to delivery note).

4.2 Removing the packaging from the solenoid valve

i Note

Do not remove the packaging until immediately before mounting and start-up.

1. Remove the packaging from the solenoid valve.
2. Check scope of delivery.
3. Dispose and recycle the packaging in accordance with the local regulations.

4.3 Transporting the solenoid valve

Transport instructions

⇨ Protect the solenoid valve against external influences (e.g. impact).

⇨ Protect the solenoid valve against moisture and dirt.

⇨ Observe transport temperature depending on the permissible ambient temperature (see Chapter 3.1).

4.4 Lifting the solenoid valve

Due to the low service weight, lifting equipment is not required to lift the solenoid valve.

4.5 Storing the solenoid valve

! NOTICE

Risk of damage to the solenoid valve due to incorrect storage.

⇨ *Observe the storage instructions.*

⇨ *Avoid longer storage periods.*

⇨ *Contact SAMSON in case of different storage conditions or longer storage times.*

i Note

SAMSON recommends to regularly check the solenoid valve and the prevailing storage conditions during long storage periods.

Storage instructions

– Protect the solenoid valve against external influences (e.g. impact, shocks, vibration).
– Do not damage the corrosion protection (coating).
– Protect the solenoid valve against moisture and dirt. In damp spaces, prevent condensation. If necessary, use a drying agent or heating.
– Observe storage temperature depending on the permissible ambient temperature (see Chapter 3.1).
– Store solenoid valve with closed cover in airtight packaging.

5 Installation

The work described in this chapter is to be performed only by personnel appropriately qualified to carry out such tasks.

⚠ DANGER

Risk of fatal injury due to the ignition of an explosive atmosphere.

Incorrect installation, operation or maintenance of the device in potentially explosive atmospheres may lead to ignition of the atmosphere and ultimately to death.

⇨ *The following regulations apply to installation in hazardous areas: EN 60079-14 (VDE 0165-1).*

⇨ *Installation, operation or maintenance of the solenoid valve is to be performed only by personnel who has undergone special training or instructions or who is authorized to work on explosion-protected devices in hazardous areas.*

⇨ *Read the special instructions concerning explosion protection (see Chapter 1.4).*

⚠ WARNING

Risk of personal injury due to parts bursting or the process medium spurting out under high pressure.

⇨ *Before installation, depressurize the relevant plant section.*

❗ NOTICE

Risk of malfunction due to incorrect mounting parts or accessories.

⇨ *Only use the mounting parts and accessories listed in these mounting and operating instructions to mount and install the solenoid valve. Pay special attention to the type of attachment.*

❗ NOTICE

Risk of degree of protection being rendered ineffective.

⇨ *Only operate the device with the enclosure cover mounted and the exhaust air filters installed.*

5.1 Installation conditions

Work position

The work position for the solenoid valve is the front view onto the device cover seen from the position of operating personnel.

Plant operators must ensure that, after installation of the device, the operating personnel can perform all necessary work safely and easily access the device from the work position.

Mounting position

The valve can be mounted in any desired position.

⇨ Mount the solenoid valve in such a way that the cable gland faces downward.
If not possible, mount it in the horizontal position.

⇨ The filter in the enclosure cover and the cable gland must face downward or, in cases where this is not possible, mount them in the horizontal position.

⇨ On mounting, make sure that ≥300 mm clearance is kept above the enclosure cover.

⇨ In cases where mechanical damage of the enclosure cannot be ruled out at the site of installation, mount additional protection to the enclosure.

5.2 Preparation for installation

Before installation, make sure that the following conditions are met:

– The solenoid valve is not damaged.

Proceed as follows:

⇨ Lay out the necessary material and tools to have them ready during installation work.

⇨ Perform the activities described below in the prescribed sequence.

5.3 Mounting the solenoid valve

⚠ WARNING

Risk of personal injury due to parts bursting or the process medium spurting out under high pressure.

⇨ *Before installation, depressurize the relevant plant section.*

5.3.1 Rail mounting

⇨ See Fig. 23 and Fig. 24.

Types 3963-xxxxx11/-xxxxx12

⇨ See Chapter 15.1 for mounting base (accessories).

⇨ Mount the solenoid valve on two mounting bases for G-profile rail 32 according to EN 50035 or 35 mm top-hat rail according to EN 50022.

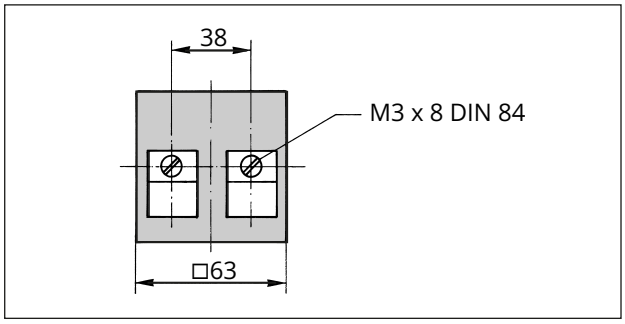

Fig. 23: *Rail mounting · G-profile rail 32*

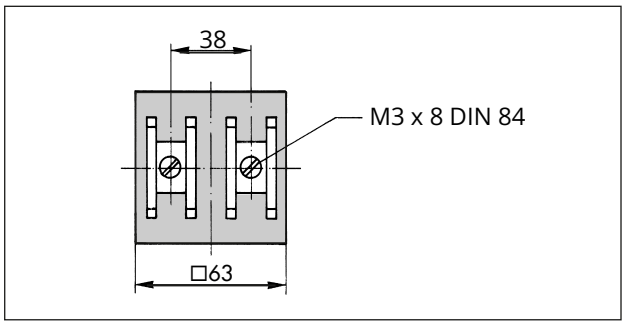

Fig. 24: *Rail mounting · 35 mm top-hat rail*

5.3.2 Wall mounting

⇨ See Fig. 25.

Types 3963-xxxxx11/-xxxxx12

⇨ See Chapter 15.1 for mounting plate (accessories).

⇨ Mount the solenoid valve on the mounting plate for wall mounting.

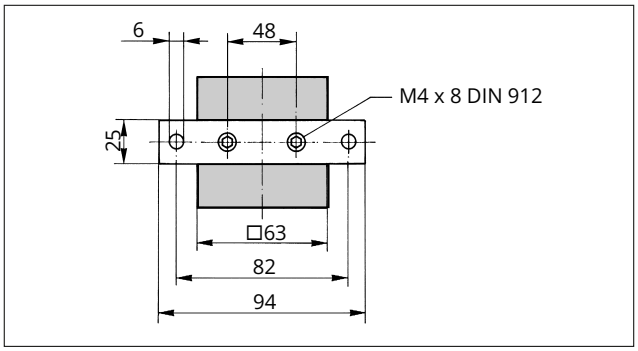

Fig. 25: *Wall mounting*

Types 3963-xxxxx13/-xxxxx14

⇨ Insert the screws through the boreholes and fasten the solenoid valve.

⇨ See dimensions of the solenoid valve in Chapter 3.3.

5.3.3 Attachment to rotary actuator with NAMUR interface

⇨ See Fig. 26.

Types 3963-xxxxx0x

The screws required for mounting are included in the scope of delivery.

⇨ Before mounting the solenoid valve, check that two O-rings are seated properly.

⇨ Determine the direction of action of the rotary actuator at the connecting flange with an M5x10 coded threaded pin (DIN 916).

⇨ Mount the solenoid valve directly to the rotary actuator using two M5x35 (ISO 4762) screws.

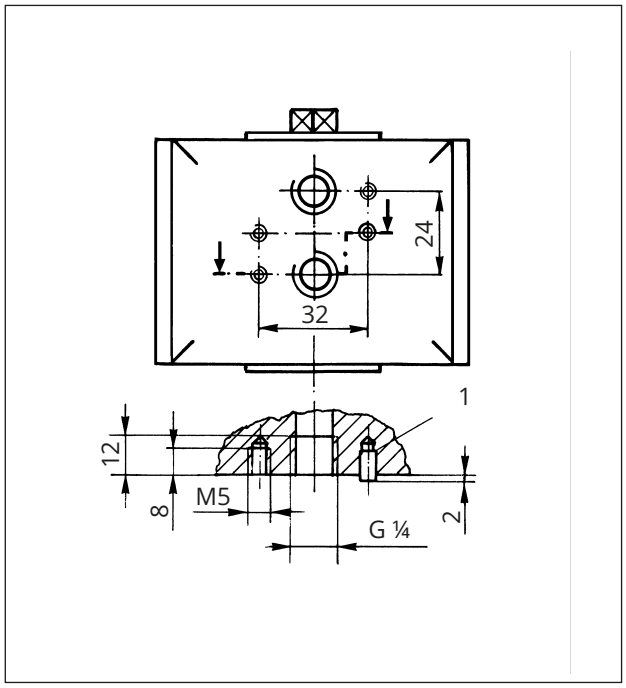

Fig. 26: *Mounting on rotary actuators with NAMUR interface*

1 Coded threaded pin

5.3.4 Mounting on linear actuator with NAMUR rib

⇨ See Fig. 27.

Types 3963-xxx002

The screw required for mounting is included in the scope of delivery.

⇨ Tighten the solenoid valve using the M8x35 screw (ISO 4762).

Types 3963-xxx0x0

⇨ Mount the solenoid valves to linear actuators using the adapter plate (see Fig. 27).

When positioners or limit switches are also to be mounted on the linear actuator (≤DN 50), a support (see Chapter 15.1) is required as accessories.

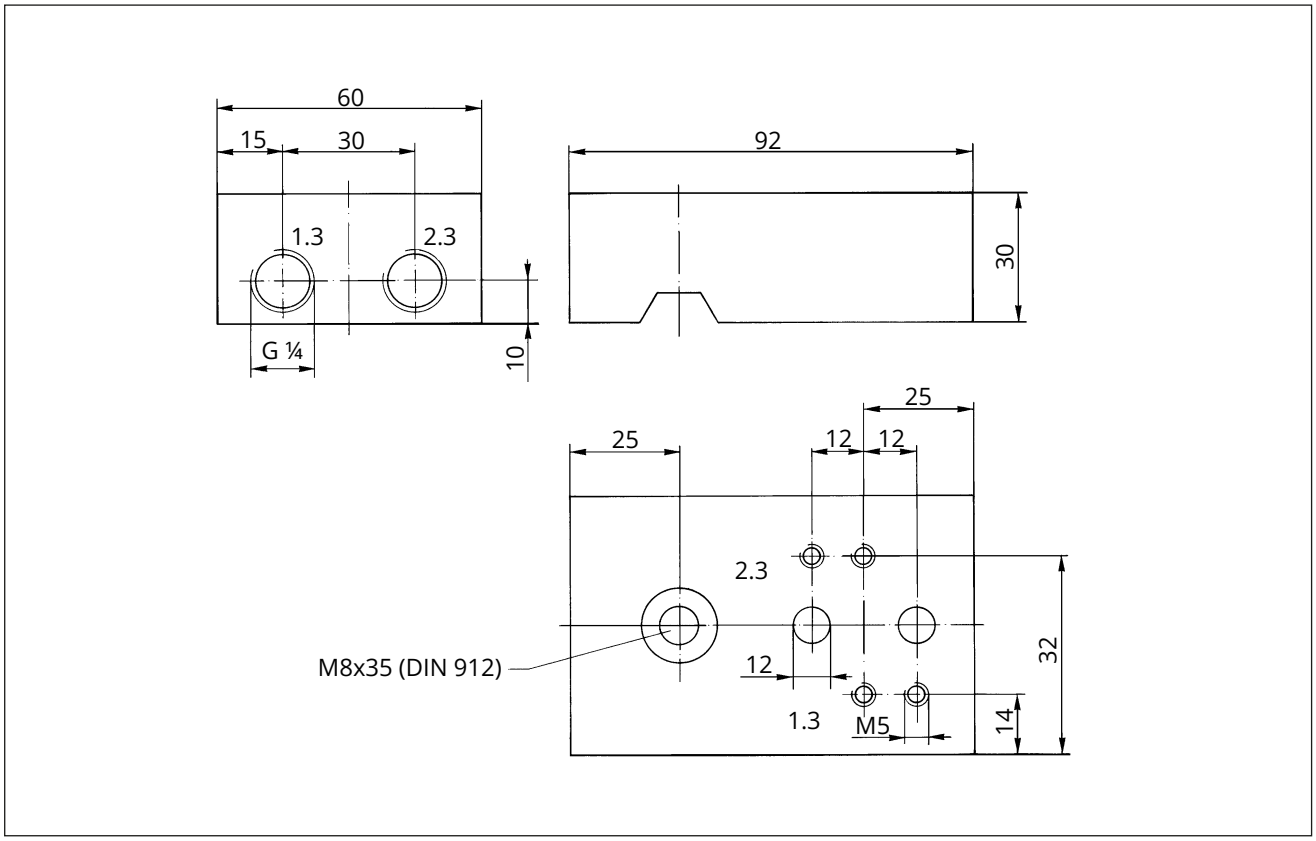

Fig. 27: *Mounting on linear actuator with NAMUR rib according to IEC 60534-1 using an adapter plate*

5.3.5 Mounting on linear actuators using CrNiMo steel pipe fitting

Types 3963-xxxxx11 (except for Types 3963xxx1011/-xxx8011)

The devices are mounted on Type 3271 or 3277 Actuators according to Fig. 28 and Fig. 29. See also the mounting and operating instructions of the linear actuators.

⇨ See ▶ EB 8310-X.

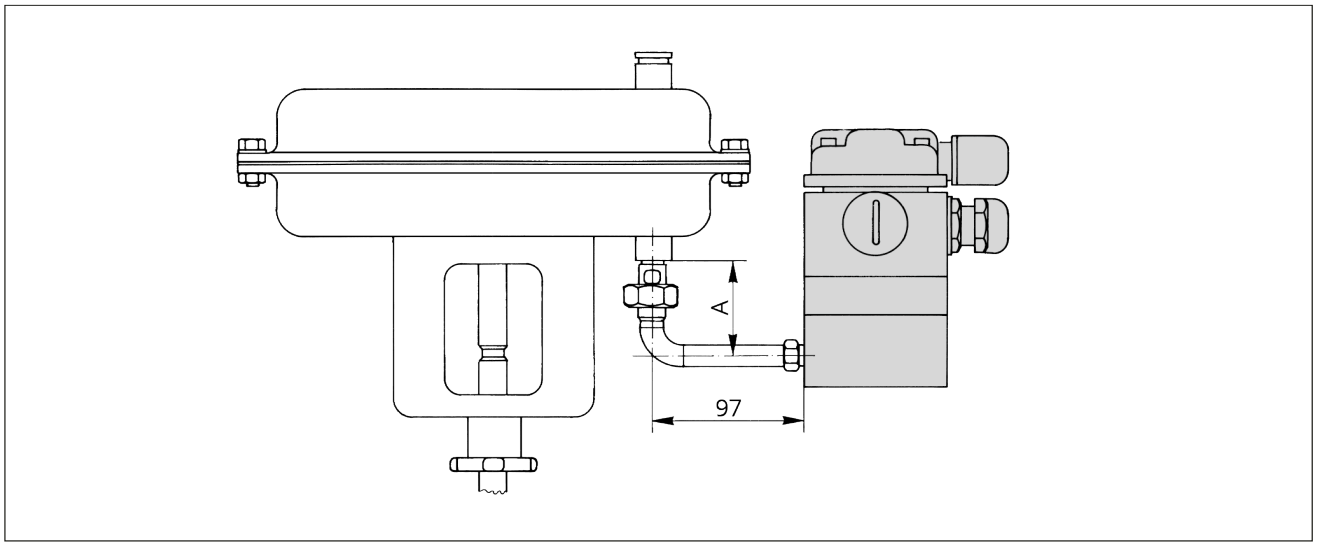

Fig. 28: *Mounting on linear actuators using CrNiMo steel pipe fitting · 175 to 750 cm² actuator areas*

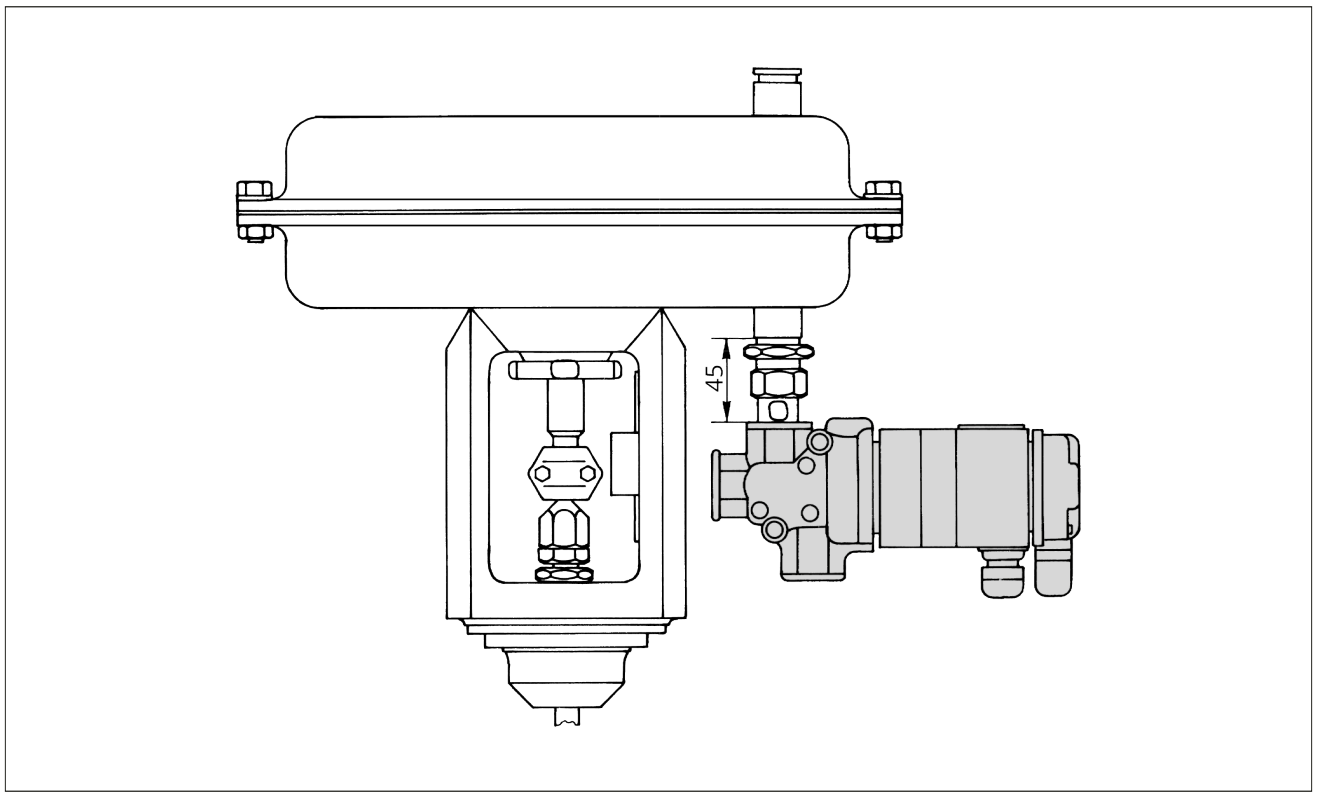

Fig. 29: *Mounting on linear actuators using CrNiMo steel pipe fitting · 1000 to 2800 cm² actuator areas*

5.3.6 Attachment to mounting block for Type 3277 Linear Actuator

⇨ See Fig. 30.

The Types 3963-XXXXX3X Solenoid Valves are suitable for the simultaneous mounting of a Type 3730-X, 3731-X, 3766, 3767, 378X or 3793 Positioner to Type 3277 Linear Actuators.

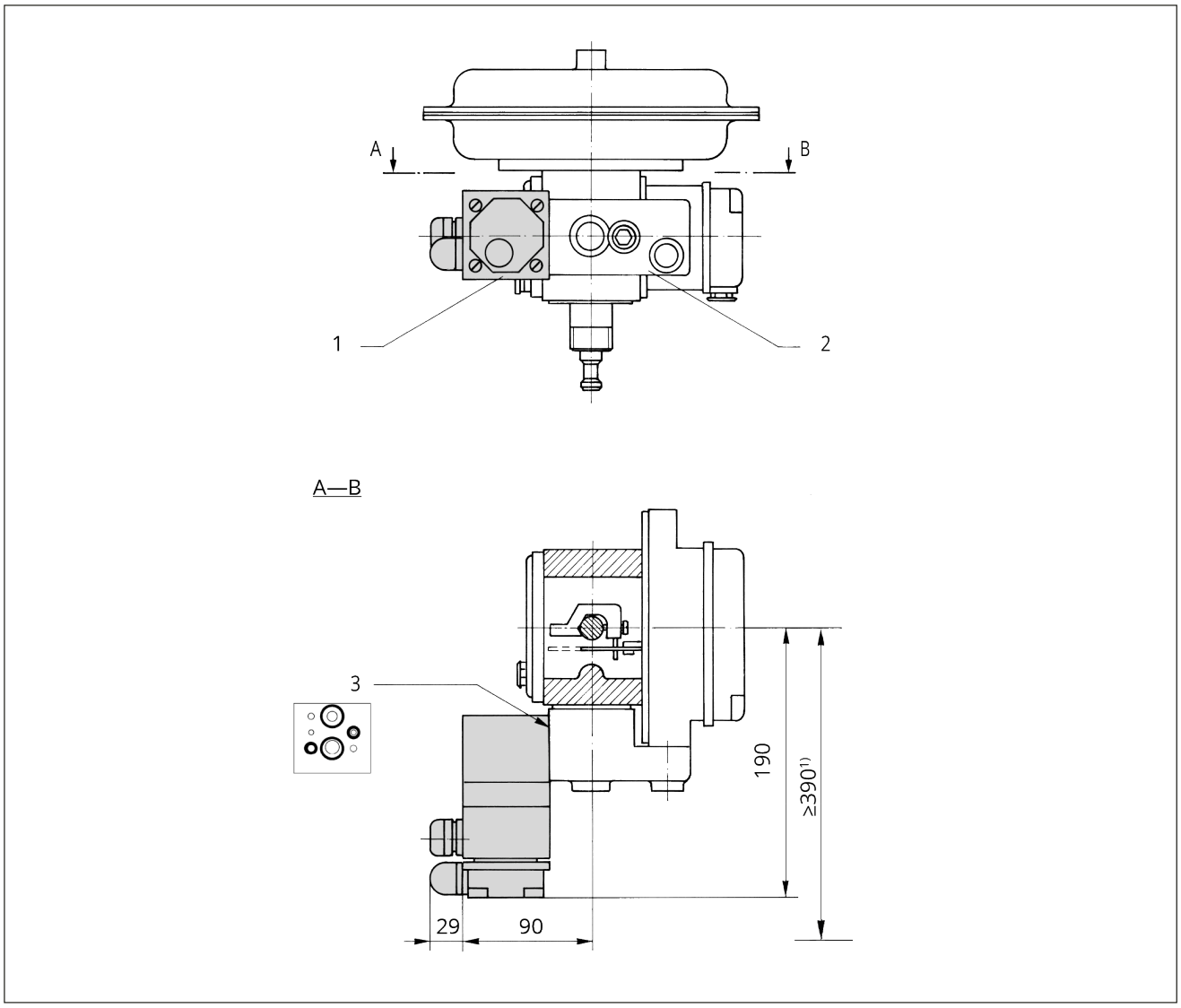

Fig. 30: *Mounting block for Type 3277 Linear Actuator*

1) Clearance to mount the cover
1 Type 3963-xxx0x3
2 Mounting block, G ¼ or ¼ NPT with hook-up set for actuator with “stem extends” fail-safe action
3 Mounting surface

5.4 Pneumatic connection

⚠ WARNING

Risk of injury due to high pressure inside device.

⇨ *Prior to performing repair and maintenance work on the device, depressurize the air connecting lines.*

⚠ WARNING

Risk of injury by possible movement of exposed parts (actuator or valve) after connecting the signal pressure.

⇨ *Do not touch or block exposed moving parts.*

The air connections are designed as threaded holes with G or NPT thread depending on the device version.

⇨ Run and attach the air connecting lines and screw joints according to good professional practice.

⇨ Check the air connecting lines and screw joints for leaks and damage at regular intervals and repair them, if necessary.

⇨ Protect the exhaust air ports by installing a filter or taking other appropriate measures to prevent water or dirt from entering them.

The K_{VS} coefficient of an upstream pressure reducing valve must be at least 1.6 times larger than the K_{VS} coefficient of the solenoid valve.

5.4.1 Sizing the connecting line

Table 8: *Minimum required nominal size of the connecting line*

Nominal size (connection length ≤2 m)				
K_{VS} coefficient	0.16 0.32	1.4	2.0 4.3	–
Connection→	4	1 and 3	4	9
Pressure ↓				
≥1.4 bar	≥DN 6	≥DN 8	≥DN 10	≥DN 4
≥2.5 bar	≥DN 4	≥DN 6	≥DN 8	
≥6 bar		≥DN 4	≥DN 6	

The values apply to a connection length of ≤2 m.

⇨ Use a larger nominal size when the connection length exceeds 2 m.

Types 3963-xxxx0x3/-xxxx014

Check whether the nominal size of the connecting line for these devices is sufficiently sized as follows:

1. Unscrew the threaded stopper from port 9 and mount a pressure gauge.
2. The nominal size of the connecting line is sufficient when the pressure reaches ≥1.3 bar during a switching process.

5.4.2 Compressed air quality

⚠ DANGER

Risk of asphyxiation due to the displacement of air when using nitrogen in unventilated spaces.

⇨ *Discharge the exhaust air of the solenoid pilot valve and booster valve over a common pipe to the atmosphere.*

❗ NOTICE

An operating pressure above the maximum permissible operating pressure will damage the solenoid valve.

⇨ *Observe the max. operating pressure (see Chapter 3.1).*

⇨ *If necessary, use a pressure reducer to restrict the operating pressure.*

❗ NOTICE

Risk of malfunction due to failure to comply with air quality requirements.

⇨ *Only use supply air that is dry and free of oil and dust.*

⇨ *Read the maintenance instructions for upstream pressure reducing stations.*

⇨ *Blow through all air pipes and hoses thoroughly before connecting them.*

Operating medium for the booster valve

With internal pilot supply:

– Instrument air free from corrosive substances or nitrogen
– Operating pressure 1.4 to 6 bar

With external pilot supply over port 4 and K_{VS} 1.4 or 4.3:

– Instrument air free from corrosive substances, air containing oil or non-corrosive gases
– Operating pressure 0 to 10 bar

With external pilot supply over port 9

– Instrument air free from corrosive substances, air containing oil or non-corrosive gases
– Operating pressure 0 to 6 bar

Supply air for the pilot valve

– Instrument air free from corrosive substances or nitrogen
– Operating pressure 1.4 to 6 bar

Compressed air quality according to ISO 8573-1		
Particle size and quantity	Oil content	Pressure dew point
Class 4	Class 3	Class 3
≤5 µm and 100/m³	≤1 mg/m³	-20 °C/10 K below the lowest ambient temperature to be expected

5.5 Electrical connection

⚠ DANGER

Risk of fatal injury due to electric shock.

⇨ *For electrical installation, observe the relevant electrotechnical regulations and the accident prevention regulations that apply in the country of use. In Germany, these are the VDE regulations and the accident prevention regulations of the employers' liability insurance.*

⚠ DANGER

Risk of fatal injury due to the ignition of an explosive atmosphere.

Incorrect installation, operation or maintenance of the device in potentially explosive atmospheres may lead to ignition of the atmosphere and ultimately to death.

⇨ *The following regulations apply to installation in hazardous areas: EN 60079-14 (VDE 0165-1).*

⇨ *Installation, operation or maintenance of the solenoid valve is to be performed only by personnel who has undergone special training or instructions or who is authorized to work on explosion-protected devices in hazardous areas.*

⇨ *Read the special instructions concerning explosion protection (see Chapter 1.4).*

⚠ WARNING

Incorrect connection at the terminals will render the explosion protection unsafe.

⇨ *Observe the specifications in the explosion-protection certification.*

⇨ *Do not undo the enameled screws in or on the enclosure.*

⚠ WARNING

Intrinsic safety rendered ineffective in intrinsically safe devices.

⇨ *Only connect intrinsically safe devices intended for use in intrinsically safe circuits to certified intrinsically safe input-connected units.*

⇨ *Do not place intrinsically safe devices back into operation that were connected to intrinsically safe input-connected units without certification.*

⇨ *Do not exceed the maximum permissible electric values specified in the EU type examination certificates when interconnecting intrinsically safe electrical equipment (U_i or U_0, I_i or I_0, P_i or P_0, C_i or C_0 and L_i or L_0).*

Selecting cables and wires

⇨ Observe Clause 12 of DIN EN 60079-14 (VDE 0165-1) for installation of the intrinsically safe circuits.

Clause 12.2.2.7 applies when running multi-core cables and wires with more than one intrinsically safe circuit.

– Preferably use connecting cables with minimum ≥0.5 mm² conductor cross-section and 6 to 12 mm outside diameter.
– The radial thickness of the insulation of a conductor for common insulating materials (e.g. polyethylene) must not be smaller than 0.2 mm.
– The diameter of a single wire in a fine-stranded conductor must not be smaller than 0.1 mm.
– Protect the conductor ends against splicing, e.g. by using wire-end ferrules.
– In equipment used in ambient temperatures below -20 °C, the cables must be routed through metal cable glands.
– Seal cable entries left unused with screw plugs.

5.5.1 Switching amplifier

⇨ For operation of the solenoid valve, install switching amplifiers according to DIN EN 60947-5-6 into the output circuit.

They must comply with the limits of the control circuit to ensure safe operation of the solenoid valve.

⇨ Observe the relevant regulations for installation in hazardous areas.

Equipment for use in zone 2

The following applies to equipment operated according to type of protection Ex nA II (non-sparking equipment) according to EN 60079-15:
Circuits may be connected, interrupted or switched while energized only during installation, maintenance or repair.

5.5.2 Cable entry with cable gland

A M20x1.5 cable gland is used at the cable entry. The conductors are connected to the terminals in the enclosure or a connector.

– The cable gland version depends on the permissible ambient temperature range (see Chapter 3.1).

– When two separate cables are used for connection, an additional cable gland can be installed.

5.5.3 Connecting the power supply

⇨ Connect the electrical power supply as shown in Fig. 31 to Fig. 34 (depending on the type of connection).

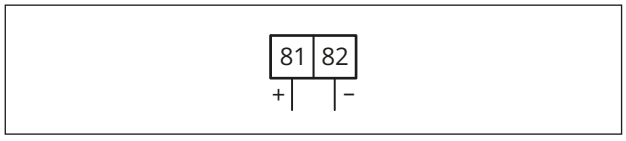

Fig. 31: *Terminal connection in the enclosure*

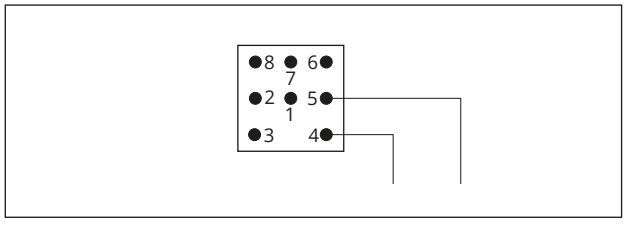

Fig. 32: *Cable socket (Harting)*

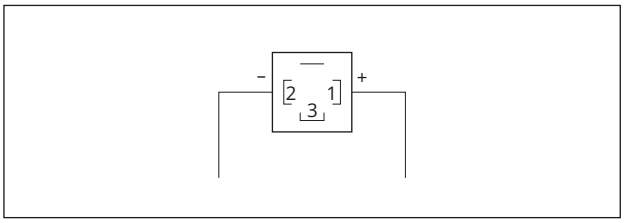

Fig. 33: *Cable socket according to EN 175301-803*

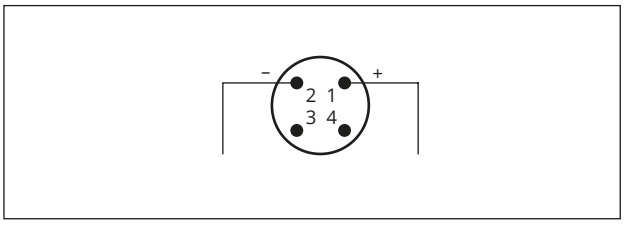

Fig. 34: *Cable socket M12x1*

6 Start-up

6.1 Changeover to external pilot supply over port 9

If the solenoid valve is to be used to switch the output signal (0 to 6 bar) of a positioner, the pilot supply must be routed externally over port 9.

Types 3963-xxxx0x4/-xxxxxx7

⇨ See Fig. 35.

The pilot supply in these devices is fed internally over port 4, if not specified otherwise. To change to an external supply over port 9, proceed as follows:

1. Undo the cap screw on the connection plate and remove plate and gasket.
2. Turn the gasket by 90°. The tip of gasket must rest in the plate cut-out marked '9'.
3. Fasten the plate and gasket to the connection plate.

i *Note*

The gasket of these solenoid valves must be inserted as specified for "Internal pilot supply over port 4" (see Fig. 37 and Fig. 38).

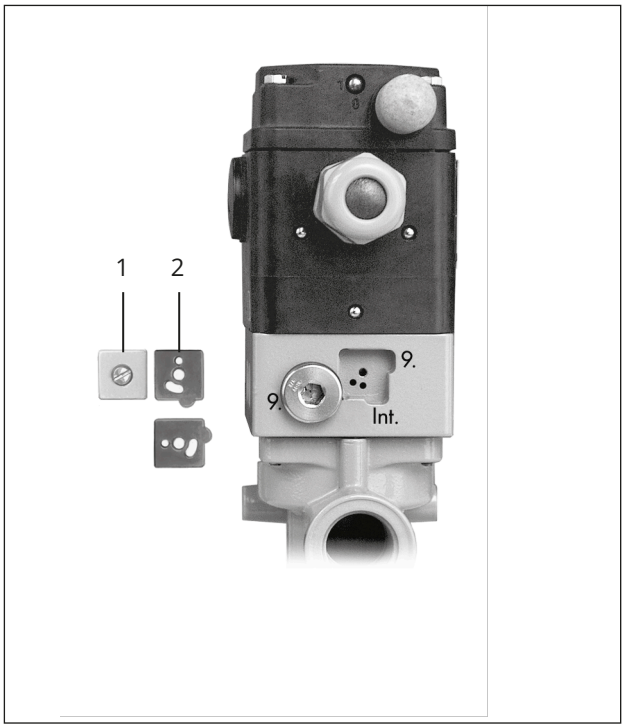

Fig. 35: *Changeover to external pilot supply: Types 3963-XXXX0X4/-XXXXXX7*

1 Plate
2 Turnable gasket

Types 3963-xxxx0x3/-xxxx006

⇨ See Fig. 36.

The pilot supply in these devices is fed internally over port 1 or 3, if not specified otherwise. To change to an external supply over port 9, proceed as follows:

1. Undo the cap screw on the connection plate and remove plate and gasket.
2. Turn the gasket 180°. The tip of gasket must rest in the plate cut-out marked '9'.
3. Fasten the plate and gasket to the connection plate.

The changeover must be performed on both pilot valves for double-controlled booster valves.

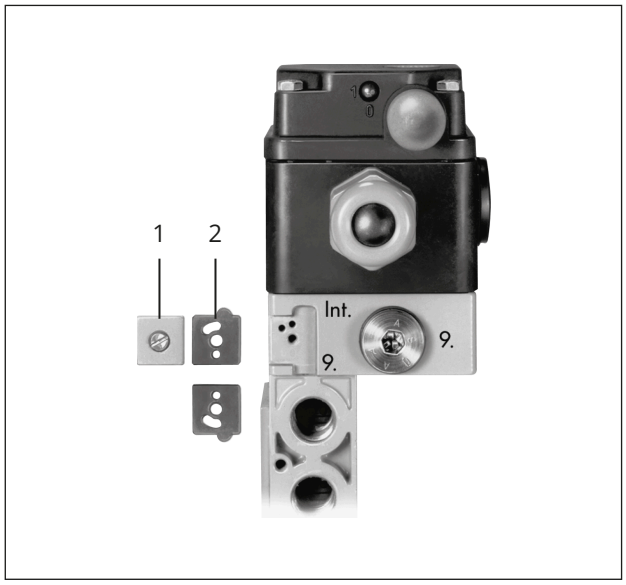

Fig. 36: *Changeover to external pilot supply: Types 3963-XXXX0X3/-XXXX006*

1 Plate
2 Turnable gasket

Types 3963-xxx0002/-xxx0012/-xxx0022/-xxx1011

⇨ See Fig. 37 and Fig. 38.

The pilot supply in these devices is fed internally over port 4, if not specified otherwise. To change to an external supply over port 9, proceed as follows:

1. Undo the four cap screws and remove the enclosure cover.
2. Undo the three hex socket head cap screws and remove the solenoid valve from the connecting plate.
3. Turn the gasket 180°. The tip of gasket must rest in the device cut-out marked '9'.
4. Fasten the solenoid valve and enclosure cover.



Fig. 37: *Mounting the gasket · Internal supply over port 4*



Fig. 38: *Mounting the gasket · External supply over port 9*

Types 3963-xxxx001/-xxx0011/-xxx0x3x/-xxx0101/-xxx0111/ -xxx1001/-xxx1201/-xxx8001

⇨ See Fig. 37 and Fig. 38.

It is not possible to convert these devices to accept an external pilot supply. An installed gasket must be inserted as specified for “Internal pilot supply over port 4”.

6.2 Exhaust air feedback

Type 3963-xxx0013x

In the delivered state, the port 4 of this device is sealed by a blanking plug. If the exhaust air feedback of actuators with spring return mechanism is to be used, remove the blanking plug and connect port 4 to the actuator's spring chamber using a DN 4 to 10 connecting line (the size depends on the actuator area).

6.3 Restrictors

Types 3963-xxxx1/-xxxx2/-xxxx3

These devices have one or two restrictors. The logic symbol on the device indicates the restriction function. Use a screwdriver to turn the restrictor screws underneath the enclosure cover or on the adapter plate to adjust the closing and opening times in a ratio of 1:15.

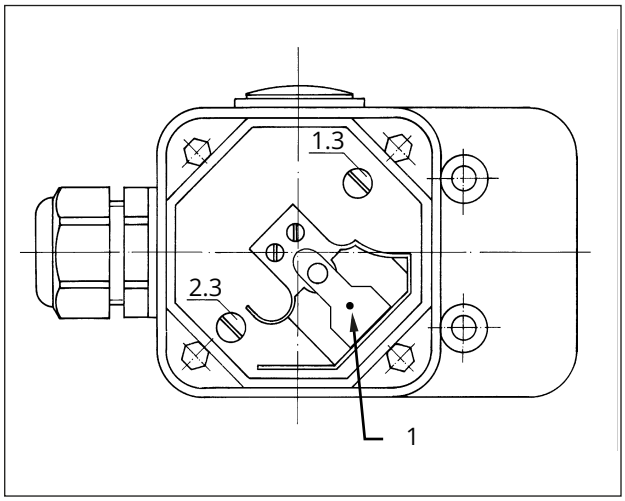

Fig. 39: *Restrictor setting · Types 3963-xxxx1/-xxxx2*

1 Manual override (optional)

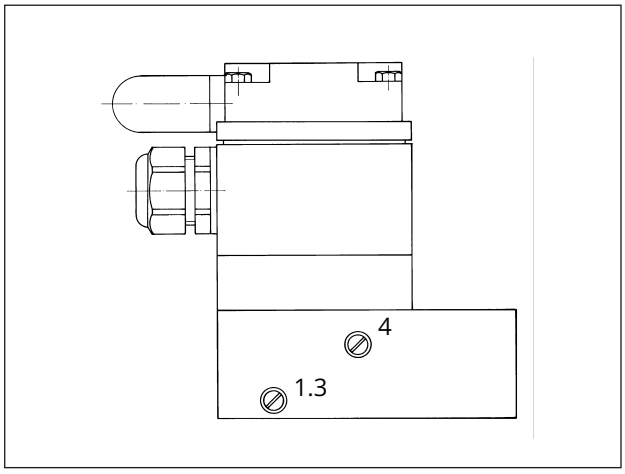

Fig. 40: *Restrictor setting · Type 3963-xxxx3*

7 Operation

The solenoid valve is ready for use after start-up is completed.

7.1 Degree of protection

Devices with a rating of IP54 can be converted to a rating of IP65 by exchanging the filter in the enclosure cover.

7.2 Manual override

The devices can be fitted with an optional manual override to allow manual operation even when no nominal signal is available. The following options are available:

- As switch in the enclosure cover
- As pushbutton in the enclosure cover
- As pushbutton underneath the enclosure cover

Tip

SAMSON recommends using devices without manual override for safety circuits.

8 Malfunctions

The work described in this chapter is to be performed only by personnel appropriately qualified to carry out such tasks.

⚠ DANGER

Risk of fatal injury due to the ignition of an explosive atmosphere.

Incorrect installation, operation or maintenance of the device in potentially explosive atmospheres may lead to ignition of the atmosphere and ultimately to death.

- ⇨ *The following regulations apply to installation in hazardous areas: EN 60079-14 (VDE 0165-1).*
- ⇨ *Installation, operation or maintenance of the solenoid valve is to be performed only by personnel who has undergone special training or instructions or who is authorized to work on explosion-protected devices in hazardous areas.*
- ⇨ *Read the special instructions concerning explosion protection (see Chapter 1.4).*

⚠ WARNING

Intrinsic safety rendered ineffective in intrinsically safe devices.

Every time the solenoid valve is operated, even when it is not installed in the plant (e.g. during maintenance, calibration and work on the device), it must be ensured that the conditions for intrinsically safe circuits are observed.

- ⇨ *Only connect intrinsically safe devices intended for use in intrinsically safe circuits to certified intrinsically safe input-connected units.*
- ⇨ *Do not place intrinsically safe devices back into operation that were connected to intrinsically safe input-connected units without certification.*
- ⇨ *Do not exceed the maximum permissible electric values specified in the EU type examination certificates when interconnecting intrinsically safe electrical equipment (U_i or U_0, I_i or I_0, P_i or P_0, C_i or C_0 and L_i or L_0).*

8.1 Troubleshooting

i *Note*

Contact SAMSON's After-sales Service for malfunctions not listed in the table.

Table 9: *Troubleshooting*

Malfunction	Possible reasons	Recommended action
The solenoid valve does not switch.	Incorrect terminal assignment	⇨ Check electrical connection.
	Turnable gasket positioned for external pilot supply	⇨ Connect port 9 and supply it with compressed air. Alternatively, turn the turnable gasket to internal pilot supply.
The solenoid valve leaks to the atmosphere.	Seal slipped	⇨ Check that the molded seal and O-rings are correctly seated.
	Pilot pressure is insufficient and an intermediate position of the solenoid valve is reached (air is constantly vented)	⇨ Check the pressure line. ⇨ Check the pressure line for leakage. ⇨ Use a larger cross-section for the pressure line.

8.2 Emergency action

The solenoid valve has a safety function. Upon failure of the supply voltage or air supply, it automatically closes (closed in the de-energized state).

Plant operators are responsible for emergency action to be taken in the plant.

9 Servicing

The work described in this chapter is to be performed only by personnel appropriately qualified to carry out such tasks.

⚠ DANGER

Risk of fatal injury due to the ignition of an explosive atmosphere.

Incorrect installation, operation or maintenance of the device in potentially explosive atmospheres may lead to ignition of the atmosphere and ultimately to death.

⇨ *The following regulations apply to installation in hazardous areas: EN 60079-14 (VDE 0165-1).*

⇨ *Installation, operation or maintenance of the solenoid valve is to be performed only by personnel who has undergone special training or instructions or who is authorized to work on explosion-protected devices in hazardous areas.*

⇨ *Read the special instructions concerning explosion protection (see Chapter 1.4).*

⚠ WARNING

Intrinsic safety rendered ineffective in intrinsically safe devices.

Every time the solenoid valve is operated, even when it is not installed in the plant (e.g. during maintenance, calibration and work on the device), it must be ensured that the conditions for intrinsically safe circuits are observed.

⇨ *Only connect intrinsically safe devices intended for use in intrinsically safe circuits to certified intrinsically safe input-connected units.*

⇨ *Do not place intrinsically safe devices back into operation that were connected to intrinsically safe input-connected units without certification.*

⇨ *Do not exceed the maximum permissible electric values specified in the EU type examination certificates when interconnecting intrinsically safe electrical equipment (U_i or U_0, I_i or I_0, P_i or P_0, C_i or C_0 and L_i or L_0).*

i *Note*

The solenoid valve was checked by SAMSON before delivery.

– *The product warranty becomes void if service or repair work not described in these instructions is performed without prior agreement by SAMSON's After-sales Service.*
– *Only use original spare parts by SAMSON, which comply with the original specifications.*

10 Decommissioning

The work described in this chapter is to be performed only by personnel appropriately qualified to carry out such tasks.

1. Close the shut-off valves upstream of the solenoid valve to stop the compressed air from flowing through the solenoid valve.
2. Relieve the pipelines completely of pressure.
3. Disconnect the supply voltage and protect it against unintentional reconnection.

11 Removal

The work described in this chapter is to be performed only by personnel appropriately qualified to carry out such tasks.

⚠ DANGER

Risk of fatal injury due to electric shock.

⇨ *Before disconnecting live wires at the device, disconnect the supply voltage and protect it against unintentional reconnection.*

⚠ DANGER

Risk of bursting in control valve components due to incorrect opening.

⇨ *Before starting any work on the solenoid valve, depressurize all plant sections affected.*

⇨ *Observe the warnings in the actuator and valve documentation.*

1. Make sure that all connecting cables are disconnected and that all air connecting lines are depressurized.
2. Disconnect wires of the connecting cable and remove the cable.
3. Remove air lines.
4. Loosen the fastening screws on the solenoid valve.
5. Remove the solenoid valve.

12 Repairs

If the solenoid valve does not function properly according to how it was originally sized or does not function at all, it is defective and must be repaired or exchanged.

NOTICE

Risk of damage to the solenoid valve due to incorrect service or repair work.

⇨ *Do not perform any repair work on your own.*

⇨ *Contact SAMSON's After-sales Service for service and repair work.*

12.1 Send the solenoid valve to SAMSON.

Defective solenoid valves can be returned to SAMSON for repair. Proceed as follows to return solenoid valves:

1. Put the solenoid valve out of operation (see Chapter 10).
2. Remove the solenoid valve (see Chapter 11).
3. Continue as described on our website at ▶ www.samsongroup.com > Service > After-sales Service > Returning goods.

13 Disposal



SAMSON is a producer registered in Europe, agency in charge
▶ www.samsongroup.com > About SAMSON > Environment, Social & Governance > Material Compliance > Waste electrical and electronic equipment (WEEE)
WEEE reg. no.: DE 62194439

Information on substances listed as substances of very high concern (SVHC) on the candidate list of the REACH regulation can be found in the document “Additional Information on Your Inquiry/Order”, which is added to the order documents, if applicable. This document includes the SCIP number assigned to the devices concerned. This number can be entered into the database on the European Chemicals Agency (ECHA) website (▶ https://www.echa.europa.eu/scip-database) to find out more information on the SVHC contained in the device.

Note

SAMSON can provide you with a recycling passport on request. Simply e-mail us at aftersales-fr@samsongroup.com giving details of your company address.

Tip

On request, SAMSON can appoint a service provider to dismantle and recycle the product as part of a distributor take-back scheme.

⇨ Observe local, national and international refuse regulations.

⇨ Do not dispose of components, lubricants and hazardous substances together with your other household waste.

14 Certificates

The following certificate is shown on the next page:

– EU declarations of conformity

– EU type examination certificate

– Explosion protection certificates

The certificates shown were up to date at the time of publishing. The latest certificates can be found on our website:

▶ www.samsongroup.com > Products > Valve accessories > 3963

SMART IN FLOW CONTROL.

SAMSON

EU Konformitätserklärung / EU Declaration of Conformity / Déclaration UE de conformité

Die alleinige Verantwortung für die Ausstellung dieser Konformitätserklärung trägt der Hersteller/
This declaration of conformity is issued under the sole responsibility of the manufacturer/
La présente déclaration de conformité est établie sous la seule responsabilité du fabricant.

Für das folgende Produkt / For the following product / Nous certifions que le produit

Magnetventil / Solenoid Valve / Electrovanne
Typ/Type/Type 3963

wird die Konformität mit den einschlägigen Harmonisierungsrechtsvorschriften der Union bestätigt /
the conformity with the relevant Union harmonisation legislation is declared with/
est conforme à la législation d'harmonisation de l'Union applicable selon les normes:

EMC 2014/30/EU	EN 61000-6-2:2005, EN 61000-6-3:2007/ A1:2010, EN 61326-1:2013
LVD 2014/35/EU	EN 61010-1:2010
RoHS 2011/65/EU	EN 50581:2012

Hersteller / Manufacturer / Fabricant:

SAMSON AKTIENGESELLSCHAFT
Weismüllerstraße 3
D-60314 Frankfurt am Main
Deutschland/Germany/Allemagne

Frankfurt / Francfort, 2017-07-29
Im Namen des Herstellers/ On behalf of the Manufacturer/ Au nom du fabricant.

i.V. H. Zager

Hanno Zager
Leiter Qualitätssicherung/Head of Quality Managment/
Responsable de l'assurance de la qualité

i.V. Dirk Hoffmann

Dirk Hoffmann
Zentralabteilungsleiter/Head of Department/Chef du département
Entwicklungsorganisation/Development Organization

ce_3963-0_de_en_fra_rev07.pdf

SAMSON REGULATION S.A.S.

DECLARATION DE CONFORMITE
DECLARATION OF CONFORMITY
符合性声明

DC026
2020-04

La présente déclaration de conformité est établie sous la seule responsabilité du fabricant.
This declaration of conformity is issued under the sole responsibility of the manufacturer.
制造商对发布的符合性声明全权负责。

Nous certifions que les produits suivants en exécution standard :
For the following products in standard execution:
适用于下述型号的产品：

Type / type / 型号 : 3776, 3777, 3812, 3963, 3964, 3967, 4708, 4746

sont conformes à la législation applicable :
the conformity with the relevant legislation is declared with:
声明符合相关法规：

China RoHS 2.0 GB/T26572-2011

et contiennent les substances suivantes :
and contain the following substances:
并含有以下物质：

SAMSON REGULATION S.A.S.

DECLARATION DE CONFORMITE **DC026**
DECLARATION OF CONFORMITY **2020-04**
符合性声明

标签 The label	部件名称 Component Name	有害物质/Hazardous substance					
		Pb	Hg	Cd	Cr(VI)	PBB	PBDE
		铅 Lead	水银 Mercury	镉 Cadmium	六价铬 Hexavalent Chromium	多溴联苯 Polybrominated biphenyls	多溴联苯醚 Polybrominated diphenyl ethers
	金属部件 Metal parts	X	0	0	0	0	0

本表格依据SJ/T1164的规定编制
This table is prepared according to the requirements of SJ/T 11364
O: 表示该有害物质在该部件所有均质材料中的含量均在GB/T26572规定的限量要求以下
O: Indicates that the said hazardous substance contained in all of the homogeneous materials for this part is below the limitation requirements of GB/T 26572
X: 表示该有害物质至少在该部件的某一均质材料中的含量超出GB/T26572规定的限量要求
X: Indicates that the said hazardous substance contained in at least one of the homogeneous materials used for this part is above the limitation requirements of GB/T 26572

Fabricant :
Manufacturer:
制造商

SAMSON REGULATION S.A.S.
1, rue Jean Corona
69120 Vaulx-en-Velin
France

Vaulx-en-Velin, le 20/04/2020

Au nom du fabricant,
On behalf of the Manufacturer,
制造商的代表人

SAMSON REGULATION S.A.S.

Joséphine SIGNOLES-FONTAINE
Responsable QSE
QSE Manager
QSE 负责人

DECLARATION OF CONFORMITY

DC007
2021-12

Regulation (EU) No. 1907/2006 (REACH, Registration, Evaluation, Authorisation and Restriction of Chemicals); United Nations Globally Harmonised System (UN GHS); and WFD, Waste Framework Directive (EU) 2008/98/EC, Article 9(1)(i) as amended by Directive (EU) 2018/851 of 30 May 2018, and their national implementations

---

We hereby certify that we are well informed about the REACH regulation, which entered into force on 1 June 2007 and have determined the applicable consequences and obligations, especially pre-registration and registration of substances, notifications to public bodies, authorization, and restriction. We manufacture "articles" as defined in the REACH Regulation Article 2. As a result, we are a "downstream user" in most cases. We do not produce any substances or mixtures that we sell.

Concerning the registration of the relevant substances we use to manufacture our products, we can inform you based on REACH Article 10 that, on the basis of the information presently available to us, we do not currently reach the threshold of one ton per year. It is possible for us to provide more precise data if required.

Concentration of SVHC (substances of very high concern) in SAMSON Products

We have a duty to communicate information to our customers on substances contained in our products according to Article 33 of the REACH Regulation: SAMSON calculate the contents of the substances in every individual article (e.g. nuts, bolts etc.) included in a bill of materials separately, following the judgment by the Court of Justice of the European Union concerning case C-106/14 of 16 October 2015, "Once an article, always an article" (O5A). SAMSON refer to a Candidate List of SVHC, that lists up the substances that we report:

These substances are often determined based on the classification of chemical substances and mixtures in the United Nations Global Harmonized System (UN GHS). We implement these systematics in Europe by following the Regulation (EC) No. 1272/2008 (CLP) on classification, labeling and packaging of substances and mixtures, forming a unified approach with the REACH Regulation. Both Safety Data Sheets (SDS, MSDS) for chemicals and chemical mixtures as well as SAMSON Material Data Sheets (MDS) for declaring a material and its substance content are prescribed by these regulations, based on an official list:

Compliance with the Candidate List of SVHC for Authorisation

Should you need to make reference to the most recent list, kindly see to the version published on the Internet, with the latest SAMSON references. Go to the following website to check whether the duty to communicate information according to REACH Article 33 applies to a SAMSON product:
https://www.samsongroup.com/en/about-samson/material-compliance/reach-regulation/#c2723
Also, we frequently cite further SVHC details on the delivery papers.

The Candidate List according to Article 59 (1, 10) of Regulation (EC) No. 1907/2006 (REACH) was first published on 1 September 2008. Since then, it is constantly expanded every six months by the European Chemicals Agency (ECHA). The Candidate List is regularly updated around the middle and end of every year. It now comprises of over 200 substances:
https://www.echa.europa.eu/web/guest/candidate-list-table (in English).

As a result, it is an on-going process to check whether our products contain SVHC in a concentration greater than 0.1% (w/w). We are in close contact with our suppliers as part of this process and we will inform you if we discover that any changes apply to us.

SCIP Database, "Substances of Concern In articles as such or in complex objects (Products)"

As legally requested by the Waste Framework Directive (WFD) since 5 January 2021 and the respective national implementation, SAMSON AG input the necessary data into the European Chemical Agency's (ECHA) SCIP Database.

The REACH Candidate List is updated every six months. SAMSON will not issue, every half a year, any more statements or fill in specific, non-standardized documents of proof in over 20 different formats that our articles are not affected.

It is legally only required to communicate the affected articles and (if the need be) their sub-articles to customers if SVHC surpass 0.1 % weight of weight in in articles or in separate articles as a part of more complex articles., as specified in REACH Article 33. Also, protective measures against SVHC have to be stated where applicable.

SAMSON REGULATION SAS
Vaulx-en-Velin, 14 December 2021



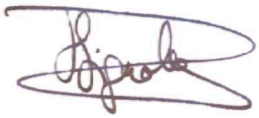

Bruno Soulas
Director of Strategy and Development

Joséphine Signoles-Fontaine
Head of QSE Department

DECLARATION DE CONFORMITE

DC007
2021-12

Règlement (UE) n° 1907/2006 (REACH, enregistrement, évaluation, autorisation et restriction des substances chimiques) ; système général harmonisé des Nations unies (SGH des Nations unies) ; et DCE, directive-cadre sur les déchets (UE) 2008/98/CE, article 9, paragraphe 1, point i), modifiée par la directive (UE) 2018/851 du 30 mai 2018, et leurs mises en œuvre nationales.

Nous certifions par la présente être bien informés sur le règlement REACH, entré en vigueur le 1er juin 2007 et avoir déterminé les conséquences et obligations applicables, notamment le pré-enregistrement et l'enregistrement des substances, les notifications aux organismes publics, l'autorisation et la restriction. Nous produisons des "articles" tels que définis dans l'article 2 du règlement REACH. Par conséquent, nous sommes un " utilisateur en aval " dans la plupart des cas. Nous ne produisons ni substance ni mélange que nous vendons.

Concernant l'enregistrement des substances pertinentes que nous utilisons pour fabriquer nos produits, nous pouvons vous informer, sur la base de l'article 10 de REACH, que, sur la base des informations dont nous disposons actuellement, nous n'atteignons pas le seuil d'une tonne par an. Il nous est possible de fournir des données plus précises si cela nous est demandé.

Concentration de SVHC (substances extrêmement préoccupantes) dans les produits SAMSON

Nous avons le devoir de communiquer à nos clients des informations sur les substances contenues dans nos produits conformément à l'article 33 du règlement REACH : SAMSON calcule séparément le contenu des substances dans chaque article individuel (par exemple, écrous, boulons, etc.) inclus dans une nomenclature, suite à l'arrêt de la Cour de justice de l'Union européenne concernant l'affaire C-106/14 du 16 octobre 2015, " Article un jour, article toujours " (O5A). SAMSON fait référence à une liste candidate de SVHC, qui énumère les substances que nous déclarons.

Ces substances sont souvent déterminées sur la base de la classification des substances et des mélanges chimiques dans le Système général harmonisé des Nations Unies (SGH des Nations Unies). Nous mettons en œuvre cette systématique en Europe en suivant le règlement (CE) n° 1272/2008 (CLP) sur la classification, l'étiquetage et l'emballage des substances et des mélanges, formant une approche unifiée avec le règlement REACH. Les fiches de données de sécurité (FDS, MSDS) pour les produits chimiques et les mélanges de produits chimiques ainsi que les fiches de données de matériaux SAMSON (MDS) pour la déclaration d'un matériau et de sa teneur en substances sont prescrites par ces règlements, sur la base d'une liste officielle.

Conformité avec la liste des SVHC candidates à l'autorisation

Si vous avez besoin de vous référer à la liste la plus récente, veuillez-vous reporter à la version publiée sur l'Internet, avec les dernières références SAMSON. Pour vérifier si l'obligation de communiquer des informations selon l'article 33 de REACH s'applique à un produit SAMSON, consultez le site Internet suivant :
https://www.samsongroup.com/en/about-samson/material-compliance/reach-regulation/#c2723
De plus, nous citons fréquemment des détails supplémentaires sur les documents de livraison de la SVHC.

La liste des substances candidates conformément à l'article 59 (1, 10) du règlement (CE) n° 1907/2006 (REACH) a été publiée pour la première fois le 1er septembre 2008. Depuis lors, elle est constamment complétée tous les six mois par l'Agence européenne des produits chimiques (ECHA). La liste des substances candidates est régulièrement mise à jour au milieu et à la fin de chaque année. Elle comprend désormais plus de 200 substances :
https://www.echa.europa.eu/web/guest/candidate-list-table (en anglais).

Par conséquent, nous vérifions en permanence si nos produits contiennent des SVHC à une concentration supérieure à 0,1 % (p/p). Nous sommes en contact étroit avec nos fournisseurs dans le cadre de ce processus et nous vous informerons si nous découvrons que des changements nous concernent.

Base de données SCIP, "Substances préoccupantes dans les articles en tant que tels ou dans les objets complexes (produits)".

Comme l'exige la directive-cadre sur les déchets (DCE) depuis le 5 janvier 2021 et sa mise en œuvre nationale, SAMSON AG a introduit les données nécessaires dans la base de données SCIP de l'Agence européenne des produits chimiques (ECHA).

La liste des candidats REACH est mise à jour tous les six mois. SAMSON n'émettra plus, tous les six mois, de déclarations ou ne remplira plus de documents spécifiques et non standardisés prouvant, dans plus de 20 formats différents, que nos articles ne sont pas concernés.

Il n'est légalement nécessaire de communiquer les articles concernés et (si besoin) leurs sous-articles aux clients que si les SVHC dépassent 0,1 % en poids dans les articles ou dans des articles séparés faisant partie d'articles plus complexes, comme spécifié dans l'article 33 de REACH. En outre, les mesures de protection contre les SVHC doivent être indiquées, le cas échéant.

SAMSON REGULATION SAS
Vaulx-en-Velin, le 14 décembre 2021

Bruno Soulas
Directeur Stratégie et Développement

Joséphine Signoles-Fontaine
Responsable du service QSE

SAMSON REGULATION S.A.S.

DECLARATION UE DE CONFORMITE
EU DECLARATION OF CONFORMITY
EU KONFORMITÄTSERKLÄRUNG

DC008
2021-12

La présente déclaration de conformité est établie sous la seule responsabilité du fabricant.
This declaration of conformity is issued under the sole responsibility of the manufacturer.
Die alleinige Verantwortung für die Ausstellung dieser Konformitätserklärung trägt der Hersteller.

Nous certifions pour les produits suivants en exécution standard :
For the following products in standard execution:
Für die folgenden Produkte in Standard-Ausführung:

Type / type / Typ : 2371, 3252, 3310, 3331, 3347, 3349, 3351, 3710, 3711, 3776, 3777, 3812, 3963, 3964, 3967, 4708, 4746, 5090, Samstation

sont conformes à la législation applicable harmonisée de l'Union :
the conformity with the relevant Union harmonization legislation is declared with:
wird die Konformität mit den einschlägigen Harmonisierungsrechtsvorschriften der Union bestätigt:

RoHS 2011/65/EU, 2015/863/EU **EN 50581:2012, IEC 63000:2016**

Fabricant :
Manufacturer:
Hersteller:

SAMSON REGULATION S.A.S.
1, rue Jean Corona
69520 Vaulx-en-Velin
France

Vaulx-en-Velin, le 14/12/21

Au nom du fabricant,
On behalf of the Manufacturer,
Im Namen des Herstellers,

SAMSON REGULATION S.A.S.

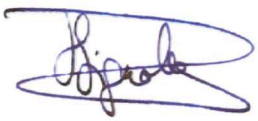

Joséphine SIGNOLES-FONTAINE
Responsable QSE

EU DECLARATION OF CONFORMITY
TRANSLATION

This declaration of conformity is issued under the sole responsibility of the manufacturer.

Manufacturer:

SAMSON AKTIENGESELLSCHAFT
Weismüllerstraße 3
60314 Frankfurt am Main
Deutschland

Product designation:

Solenoid Valve Type 3963-1..

The product described above is in conformity with the relevant Union harmonisation legislation:

EU Directive	**Standards / Technical Specifications**
2014/30/EU	EN 61000-6-2:2005 EN IEC 61000-6-2:2019 EN 61000-6-3:2007/A1:2011 EN 61326-1:2013
2014/34/EU	EN IEC 60079-0:2018 EN 60079-11:2012
2011/65/EU	EN IEC 63000:2018

Additional information to EU directive 2014/34/EU (ATEX):

The notified body:

Physikalisch Technische Bundesanstalt (PTB) / Identification number 0102
Bundesallee 100
38116 Braunschweig
Germany

performed the EU Type Approval and issued the certificate PTB 01 ATEX 2085.

Signed for and on behalf of:

Frankfurt am Main, 2025-05-19

ppa.

Fabio Roma
Vice President Smart Products & Components

i.V. J. Bieger

Jens Bieger
Director Development Electronics

Revision 09

SMART IN FLOW CONTROL.

SAMSON

EU Konformitätserklärung / EU Declaration of Conformity / Déclaration UE de conformité

Die alleinige Verantwortung für die Ausstellung dieser Konformitätserklärung trägt der Hersteller/
This declaration of conformity is issued under the sole responsibility of the manufacturer/
La présente déclaration de conformité est établie sous la seule responsabilité du fabricant.

Für das folgende Produkt / For the following product / Nous certifions que le produit

Magnetventil / Solenoid Valve /
Typ/Type/Type 3963-8...

entsprechend der EU-Baumusterprüfbescheingung PTB 01 ATEX 2086 X ausgestellt von der/
according to the EU Type Examination PTB 01 ATEX 2086 X issued by/
établi selon le certificat CE d'essais sur échantillons PTB 01 ATEX 2086 X émis par:

Physikalisch Technische Bundesanstalt
Bundesallee 100
D-38116 Braunschweig
Benannte Stelle/Notified Body/Organisme notifié 0102

wird die Konformität mit den einschlägigen Harmonisierungsrechtsvorschriften der Union bestätigt /
the conformity with the relevant Union harmonisation legislation is declared with/
est conforme à la législation d'harmonisation de l'Union applicable selon les normes:

EMC 2014/30/EU	EN 61000-6-2:2005, EN 61000-6-3:2007 +A1:2011, EN 61326-1:2013
Explosion Protection 94/9/EC (bis/to 2016-04-19) Explosion Protection 2014/34/EU (ab/from 2016-04-20)	EN 60079-0:2009, EN 60079-11:2012, EN 60079-15:2010
RoHS 2011/65/EU	EN 50581:2012

Hersteller / Manufacturer / Fabricant:

SAMSON AKTIENGESELLSCHAFT
Weismüllerstraße 3
D-60314 Frankfurt am Main
Deutschland/Germany/Allemagne

Frankfurt / Francfort, 2017-07-29

Im Namen des Herstellers/ On behalf of the Manufacturer/ Au nom du fabricant.

i.V. H. Zager

Hanno Zager
Leiter Qualitätssicherung/Head of Quality Managment/
Responsable de l'assurance de la qualité

i.V. Dirk Hoffmann

Dirk Hoffmann
Zentralabteilungsleiter/Head of Department/Chef du département
Entwicklungsorganisation/Development Organization

ce_3963-8_de_en_fra_rev07.pdf

中国国家强制性产品认证证书

证书编号：2021322307003631

认证委托人名称及地址
SAMSON AKTIENGESELLSCHAFT
Weismuellerstr. 3, 60314 Frankfurt am Main, Germany

生产者名称及地址
SAMSON AKTIENGESELLSCHAFT
Weismuellerstr. 3, 60314 Frankfurt am Main, Germany

生产企业名称及地址
SAMSON REGULATION S.A.S
1 Rue Jean Corona, 69120 Vaulx-en-Velin, France

产品名称和系列、型号、规格
电磁阀
3963-1 系列

产品标准和技术要求
GB/T 3836.1-2021、GB/T 3836.4-2021

上述产品符合《强制性产品认证实施规则 防爆电气》(CNCA-C23-01:2024)的要求，特发此证。
发证日期:2026 年 01 月 03 日　有效期至:2031 年 01 月 02 日

首次发证日期:2021 年 01 月 08 日
认证模式:型式试验+初始工厂检查+获证后监督

证书信息和有效性可扫描下方二维码或登录发证机构网站查验，
也可在认监委网站（www.cnca.gov.cn）查询。

批　准：

上海仪器仪表自控系统检验测试所有限公司

CERTIFICATE FOR CHINA COMPULSORY PRODUCT CERTIFICATION

CERTIFICATE NO.: 2021322307003631

NAME AND ADDRESS OF THE APPLICANT
SAMSON AKTIENGESELLSCHAFT
Weismuellerstr. 3, 60314 Frankfurt am Main, Germany

NAME AND ADDRESS OF THE MANUFACTURER
SAMSON AKTIENGESELLSCHAFT
Weismuellerstr. 3, 60314 Frankfurt am Main, Germany

NAME AND ADDRESS OF THE FACTORY
SAMSON REGULATION S.A.S
1 Rue Jean Corona, 69120 Vaulx-en-Velin, France

NAME, SERIES, MODEL AND SPECIFICATION
Solenoid Valve
3963-1 series

THE STANDARDS AND TECHNICAL REQUIREMENTS FOR THE PRODUCTS
GB/T 3836.1-2021、GB/T 3836.4-2021

This is to certify that the above-mentioned product(s)complies with the requirements of implementation rules for compulsory certification (CNCA-C23-01:2024).
Issue date:2026-01-03 Valid until:2031-01-02

Date of initial issue:2021-01-08
Type of Certification: Type test + Initial inspection + Surveillance inspection

The certificate details and validity can be verified by scanning the QR code below or logging into the issuing authority's official website. It can also be inquired on the CNCA website (www.cnca.gov.cn).

(In case of dispute, the Chinese text shall prevail.)

APPROVAL:

Shanghai Inspection and Testing Institute of Instruments and Automation Systems Co., Ltd.

http://www.sitilas.com.cn 103 Cao Bao Road, Shanghai 200233,China Tel: +86 21 64518419

中国国家强制性产品认证证书

证书编号：2021322307003631

证书附页：第 1 页 共 2 页

产品名称：

电磁阀

型号规格：

3963-1 系列

Articel code

Solenoid valve Type 3963

```
                a b  c  d  e  f  g  h  i  j  j
3963 -          x  x  x  x  x  x  x  x  x  x
                1  NEPSI/CCC      Ex ia IIC T4...T6 Gb
                a
                   Nominal Signal
                1  6 V DC
                2  12 V DC
                3  24 V DC
                   b
                      Reserved for pneumatic connection and mounting (Not safety relevant)
                      c  d  e  f  g  h  i
                                        Electrical connection
                                        2  5  Device connector with LED
                                        j  j
```

防爆标志：

Ex ia ⅡC T4…T6 Gb

电气参数：

Un (DC)	6V	12V	24V
最高输入电压 Ui (V)	32	32	

本页为证书附页，应与证书主页同时使用。

批 准：

上海仪器仪表自控系统检验测试所有限公司

中国国家强制性产品认证证书

证书编号：2021322307003631

最大输入电流 Ii (mA)	150	150
最大输入功率 Pi (mW)	250	/
最大内部电容 Ci(μF)	忽略不计	
最大内部电感 Li(mH)	忽略不计	

相关报告编号：

2020S17402-004854

2023S17402-011515

使用条件：

1. 严禁磨擦产品的塑料外壳表面，以防静电危险。
2. 使用环境温度范围：

温度组别	T6	T5	T4
不带 LED 显示插头	–45℃～+60℃	–45℃～+70℃	–45℃～+80℃
带 LED 显示插头（3963–1. …….25	–45℃～+55℃	–45℃～+70℃	–45℃～+80℃

本页为证书附页，应与证书主页同时使用。

批 准：

上海仪器仪表自控系统检验测试所有限公司

http://www.sitiias.com.cn 中国•上海•漕宝路103号200233 电话：+86 21 64518419

Physikalisch-Technische Bundesanstalt
Braunschweig und Berlin

TRANSLATION

(1) EC TYPE EXAMINATION CERTIFICATION

(2) Equipment and Protective Systems Intended for Use in Potentially Explosive Atmospheres – **Directive 94/9/EC**

(3) EC Type Examination Certificate Number

PTB 01 ATEX 2085

(4) Equipment: Model 3963-1.. Solenoid Valve

(5) Manufacturer: SAMSON AG

(6) Address: Weismüllerstr. 3, D-60314 Frankfurt, Germany

(7) The equipment and any acceptable variations thereof are specified in the schedule to this certificate.

(8) The Physikalisch-Technische Bundesanstalt, notified body number 0102 according to Article 9 of the Council Directive 94/9/EC of 23 March 1994, certifies that this equipment has been found to comply with the Essential Health and Safety Requirements relating to the design and construction of equipment and protective systems intended for use in potentially explosive atmospheres specified in Annex II to the Directive.

The examination and test results are recorded in confidential report: **PTB Ex 01-21061**

(9) The Essential Health and Safety Requirements are satisfied by compliance with

EN 50014: 1997 **EN 50020: 1994**

EC Type Examination Certificates without signature and seal are invalid.
This EC Type Examination Certificate may only be reproduced in its entirety and without any changes, schedule included.
Extracts or changes shall require the prior approval of the Physikalisch-Technische Bundesanstalt.

(10) If the sign "X" is placed after the certificate number, it indicates that the equipment is subject to special conditions for safe use as specified in the schedule to this certificate.

(11) According to the Directive 94/9/EC, this EC TYPE EXAMINATION CERTFICATE relates only to the design and construction of the specified equipment. If applicable, further requirements of this Directive apply to the manufacture and supply of this equipment.

(12) The marking of the equipment shall include the following:

 **II 2 G EEx ia IIC T6**

Zertifizierungsstelle Explosionsschutz Braunschweig, 8. August 2001
By order

(Signature) (Seal)

Dr. Ing. U. Johannsmeyer
Regierungsdirektor

EC Type Examination Certificates without signature and seal are invalid.
This EC Type Examination Certificate may only be reproduced in its entirety and without any changes, schedule included.
Extracts or changes shall require the prior approval of the Physikalisch-Technische Bundesanstalt.

(13) # Schedule

(14) **EC TYPE EXAMINATION CERTIFICATE No. PTB 01 ATEX 2085**

(15) **Description of Equipment**

The Model 3963-1.. Solenoid Valve converts electrical binary signals in the input circuit into pneumatic output signals. It is intended for attachment to actuators and for constructing control systems.

It may be installed inside and outside of hazardous areas.

The Model 3963-1.. Solenoid Valve is a passive two-terminal network that may be connected to any certified intrinsically safe circuit, provided the permissible maximum values of U_i, I_i and P_i are not exceeded.

By connection of suitable series dropping resistors the Model 3963-1.. Solenoid Valve can accommodate nominal voltages of 6, V, 12 V and 24 V.

Electrical data

Signal circuit normal signal ... Type of protection: Intrinsic Safety EEx ia IIC

The correlation between version, temperature classification, permissible maximum ambient temperature ranges and maximum power dissipation is shown in the table below:

Version (U_N)		**6V**	**12V**	**24V**
Temperature class	T6	60°C		
	T5	-45°C ≤ Ta ≤ 70°C		
	T4	80°C		
Characteristic linear or rectangular	Pi	#	##	
C_i negligible, L_i negligible				

\# The permissible maximum power dissipation Pi in the 6 V version is 250 mW.

\## The maximum values for connection to a certified intrinsically safe circuit are shown in the table below:

EC Type Examination Certificates without signature and seal are invalid.
This EC Type Examination Certificate may only be reproduced in its entirety and without any changes, schedule included.
Extracts or changes shall require the prior approval of the Physikalisch-Technische Bundesanstalt.

U_i	25V	27V	28V	30V	32V
I_i	150mA	125mA	115mA	100mA	85mA
P_i	no limitation				
C_i negligible, L_i negligible					

(16) Test Report **PTB Ex 01-21061**

(17) Special conditions for safe use

None

(18) Special Health and Safety Requirements

In compliance with the standards specified above.

Zertifizierungsstelle Explosionsschutz
By order

Braunschweig, 8 August 2001

(Signature) (seal)

Dr. Ing. U. Johannsmeyer
Regierungsdirektor

EC Type Examination Certificates without signature and seal are invalid.
This EC Type Examination Certificate may only be reproduced in its entirety and without any changes, schedule included.
Extracts or changes shall require the prior approval of the Physikalisch-Technische Bundesanstalt.

Physikalisch-Technische Bundesanstalt

Braunschweig und Berlin

1. SUPPLEMENT

according to Directive 94/9/EC Annex III.6

to EC-TYPE-EXAMINATION CERTIFICATE PTB 01 ATEX 2085

(Translation)

Equipment: Solenoid, type 3963-1.. and type 3963-1.....25

Marking:  **II 2 G Ex ia IIC T6 Gb alternatively II 2 G Ex ia IIC T6**

Manufacturer: SAMSON AG Mess- und Regeltechnik

Address: Weismüllerstr. 3, 60314 Frankfurt, Germany

Description of supplements and modifications

The solenoid of type 3963-1.. converts binary electrical signals of the input circuit into pneumatic output signals. It is mounted on actuators and used for the design of control systems.

The equipment is intended for the installation in hazardous areas.

The solenoid of type 3963-1.. is a passive two-terminal network that may be connected to intrinsically safe circuits unless the permisible maximum values for U_i, I_i and P_i are exceeded.

Using appropriate resistors connected in series to the coil, the solenoid of type 3963-1.. is suitable for the operation with nominal voltages of 6 V, 12 V and 24 V.

The solenoid of type 3963-1.. is supplemented by type 3963-1.....25. This variant is provided with an electrical cubic LED-plug showing the operating mode of the equipment. Further modifications have not been made.

The permissible thermal and electrical maximum values are presented in summary.

Electrical data

Signal circuit, nominal signal.....type of protection Intrinsic Safety Ex ia IIC

For relationship between variant, temperature class, permissible ambient temperature ranges and maximum power dissipation, reference is made to the following table:

ZSEx10101e.dotm

EC-type-examination Certificates without signature and official stamp shall not be valid. The certificates may be circulated only without alteration. Extracts or alterations are subject to approval by the Physikalisch-Technische Bundesanstalt.
In case of dispute, the German text shall prevail.

Physikalisch-Technische Bundesanstalt • Bundesallee 100 • 38116 Braunschweig • GERMANY

Physikalisch-Technische Bundesanstalt

Braunschweig und Berlin

1. SUPPLEMENT TO EC-TYPE-EXAMINATION CERTIFICATE PTB 01 ATEX 2085

Variant		3963-11..	3963-12..	3963-13..
U_N		6 V	12 V	24 V
3936-1..	T6	60 °C		
	T5	-45 °C ... 70 °C		
	T4	80 °C		
3936-1.....25	T6	55 °C		
	T5	-45 °C ... 70 °C		
	T4	80 °C		
linear or rectangular characteristic	P_i	*	**	

* The maximum permissible power dissipation P_i of the 6 V-design is 250 mW.

** The maximum values for connection to a certified intrinsically safe circuit are tabulated below:

U_i	25 V	27 V	28 V	30 V	32 V
I_i	150 mA	125 mA	115 mA	100 mA	85 mA
P_i	no limitation				

C_i negligibly low
L_i negligibly low

Applied standards

EN 60079-0:2009 **EN 60079-11:2012**

Test report: PTB Ex 12-22145

Zertifizierungssektor Explosionsschutz
On behalf of PTB:

Dr.-Ing. U. Johannsmeyer
Direktor und Professor

Braunschweig, November 28, 2012

EC-type-examination Certificates without signature and official stamp shall not be valid. The certificates may be circulated only without alteration. Extracts or alterations are subject to approval by the Physikalisch-Technische Bundesanstalt.
In case of dispute, the German text shall prevail.

Physikalisch-Technische Bundesanstalt • Bundesallee 100 • 38116 Braunschweig • GERMANY

Physikalisch-Technische Bundesanstalt
Braunschweig und Berlin
Nationales Metrologieinstitut

(1) # EU-TYPE EXAMINATION CERTIFICATE

(Translation)

(2) Equipment or Protective Systems Intended for Use in Potentially Explosive Atmospheres - **Directive 2014/34/EU**

(3) EU-Type Examination Certificate Number:

PTB 01 ATEX 2085 **Issue: 01**

(4) Product: Solenoid valve, type 3963-1. ....

(5) Manufacturer: SAMSON AG

(6) Address: Weismüllerstraße 3, 60314 Frankfurt, Germany

(7) This product and any acceptable variation thereto is specified in the schedule to this certificate and the documents therein referred to.

(8) The Physikalisch-Technische Bundesanstalt, notified body No. 0102 in accordance with Article 17 of the Directive 2014/34/EU of the European Parliament and of the Council, dated 26 February 2014, certifies that this product has been found to comply with the Essential Health and Safety Requirements relating to the design and construction of products intended for use in potentially explosive atmospheres, given in Annex II to the Directive.

The examination and test results are recorded in the confidential Test Report PTB Ex 19-27051.

(9) Compliance with the Essential Health and Safety Requirements has been assured by compliance with:

EN 60079-0:2012+A11:2013 **EN 60079-11:2012**

(10) If the sign "X" is placed after the certificate number, it indicates that the product is subject to the Specific Conditions of Use specified in the schedule to this certificate.

(11) This EU-Type Examination Certificate relates only to the design and construction of the specified product in accordance to the Directive 2014/34/EU. Further requirements of the Directive apply to the manufacturing process and supply of this product. These are not covered by this certificate.

(12) The marking of the product shall include the following:

II 2 G Ex ia IIC T6...T4 Gb

Konformitätsbewertungsstelle, Sektor Explosionsschutz Braunschweig, November 18, 2019
On behalf of PTB:

Dr.-Ing. F. Lienesch
Direktor und Professor

PHYSIKALISCH-TECHNISCHE BUNDESANSTALT 24

ZSEx001e c

EU-Type Examination Certificates without signature and official stamp shall not be valid. The certificates may be circulated only without alteration. Extracts or alterations are subject to approval by the Physikalisch-Technische Bundesanstalt.
In case of dispute, the German text shall prevail.

Physikalisch-Technische Bundesanstalt • Bundesallee 100 • 38116 Braunschweig • GERMANY

SCHEDULE

(13)

(14) EU-Type Examination Certificate Number PTB 01 ATEX 2085, Issue: 01

(15) Description of Product

The solenoid valve converts binary electrical signals of the input circuit into pneumatic output signals. It is mounted on actuators and used for the design of control systems.

The equipment is intended for the installation in hazardous areas.

The solenoid valve is a passive two-terminal network that may be connected to intrinsically safe circuits unless the permissible maximum values for U_i, I_i and P_i are exceeded.

The solenoid valve is suitable for the operation with nominal voltages of 6 V, 12 V and 24 V. An optionally available variant is provided with an electrical cubic LED-plug showing the operating mode of the equipment.

For relationship between temperature classes and permissible ambient temperature ranges for gas group IIC, reference is made to the following table.

Variant	Temperature class	Ambient temperature range
Without cubic LED-plug	T6	-45 °C ... +60 °C
	T5	-45 °C ... +70 °C
	T4	-45 °C ... +80 °C
With cubic LED-plug (Typ 3963-1. ..... 25)	T6	-45 °C ... +55 °C
	T5	-45 °C ... +70 °C
	T4	-45 °C ... +80 °C

Electrical data:

Signal circuit
(+ 81, - 82)

type of protection Intrinsic Safety Ex ia IIC
Only for connection to a certified intrinsically safe circuit

Maximum values:

for type 3963-11 .... (variant with nominal signal 6 V)
U_i = 32 V
I_i = 150 mA
P_i = 250 mW
L_i negligibly low
C_i negligibly low

for all remaining variants (nominal signal 12 V and 24 V)
U_i = 32 V
I_i = 150 mA
L_i negligibly low
C_i negligibly low

EU-Type Examination Certificates without signature and official stamp shall not be valid. The certificates may be circulated only without alteration. Extracts or alterations are subject to approval by the Physikalisch-Technische Bundesanstalt.
In case of dispute, the German text shall prevail.

Physikalisch-Technische Bundesanstalt • Bundesallee 100 • 38116 Braunschweig • GERMANY

SCHEDULE TO EU-TYPE EXAMINATION CERTIFICATE PTB 01 ATEX 2085 , Issue: 01

Changes with respect to previous editions

The modifications concern the update of the test specification, the marking and the electrical data.

(16) Test Report PTB Ex 19-27051

(17) Specific conditions of use

none

(18) Essential health and safety requirements

Met by compliance with the aforementioned standards.

According to Article 41 of Directive 2014/34/EU, EC-type examination certificates which have been issued according to Directive 94/9/EC prior to the date of coming into force of Directive 2014/34/EU (April 20, 2016) may be considered as if they were issued already in compliance with Directive 2014/34/EU. By permission of the European Commission supplements to such EC-type examination certificates and new issues of such certificates may continue to hold the original certificate number issued before April 20, 2016.

Konformitätsbewertungsstelle, Sektor Explosionsschutz Braunschweig, November 18, 2019
On behalf of PTB:

Dr.-Ing. F. Lienesch
Direktor und Professor

EU-Type Examination Certificates without signature and official stamp shall not be valid. The certificates may be circulated only without alteration. Extracts or alterations are subject to approval by the Physikalisch-Technische Bundesanstalt.
In case of dispute, the German text shall prevail.

Physikalisch-Technische Bundesanstalt • Bundesallee 100 • 38116 Braunschweig • GERMANY

CERTIFICATE OF CONFORMITY

FM Approvals

1. **HAZARDOUS (CLASSIFIED) LOCATION ELECTRICAL EQUIPMENT PER US REQUIREMENTS**

2. **Certificate No:** **FM24US0232**

3. **Equipment:**
   (Type Reference and Name)
   3766-3 Pneumatic Positioner Single-Acting
   3767-3 I/P Positioner Single-Acting
   3768-3 Limit Switch
   3963-3 Solenoid Valve
   4746-3 Limit Switch
   4763-3 I/P Positioner Single-Acting
   6116-4 I/P Converter

4. **Name of Listing Company:** **Samson AG**

5. **Address of Listing Company:** **Weismullerstrasse 3, Postfach 101901, Frankfurt, D60314, Germany**

6. The examination and test results are recorded in confidential report number:

   3020228 dated 28th February 2005

7. FM Approvals LLC, certifies that the equipment described has been found to comply with the following Approval standards and other documents:

   FM 3600:2022, FM 3610:2010, FM 3611:2004, FM 3810:2005, NEMA 250:1991, ANSI/ISA 60079-0:2009, ANSI/ISA 60079-11:2009

8. If the sign 'X' is placed after the certificate number, it indicates that the equipment is subject to specific conditions of use specified in the schedule to this certificate.

9. This certificate relates to the design, examination and testing of the products specified herein. The FM Approvals surveillance audit program has further determined that the manufacturing processes and quality control procedures in place are satisfactory to manufacture the product as examined, tested and Approved.

10. Equipment Ratings:

    Intrinsically Safe for Class I, II, III, Division 1, Groups A, B, C, D, E, F, G
    Intrinsically Safe for Class I, Zone 0, AEx ia IIC
    Nonincendive for Class I, II, III Division 2, Groups A, B, C, D, F, G

Certificate issued by:

J.E. Marquedant

2 January 2025

J.E. Marquedant
VP, Manager - Electrical Systems

Date

To verify the availability of the Approved product, please refer to www.approvalguide.com

THIS CERTIFICATE MAY ONLY BE REPRODUCED IN ITS ENTIRETY AND WITHOUT CHANGE

FM Approvals LLC. One Technology Way, Norwood, MA 02062 USA
T: +1 (1) 781 762 4300 F: +1 (1) 781 762 9375 E-mail: information@fmapprovals.com www.fmapprovals.com

11. The marking of the equipment shall include:

    See Annex

12. **Description of Equipment:**

    The 3766-3 Pneumatic Positioner is intended to be connected to pneumatic control valves and converts control signals of 0.2 to 1 bar from a control device into a pneumatic signal pressure of 6 bar maximum.

    The 3767-3 I/P Positioner is intended to be connected to pneumatic control valves and converts control signals of 4-20mA from a control device into a pneumatic signal pressure of 6 bar maximum.

    The 3768-3 Limit Switch is intended to be connected to rotary and linear actuators with a conceal lever system and is equipped with up to two proximity switches and a solenoid valve.
    The solenoid valve converts electrical binary signals opening and closing an associated control valve.

    The 3963-3 Solenoid Valve coverts electrical binary signals to the input circuit into pneumatic output signals. It is intended for connection to actuators as part of a control system.

    The 4746-3 Limit Switch converts mechanical manipulated variables into electrical signals and, depending on the version, are equipped with various types of limit contacts. They are intended for attachment to pneumatic, electrical or hydraulic actuators installed inside and outside hazardous locations.

    The 4763-3 I/P Positioner is intended to be connected to pneumatic control valves. It converts control signals or 4-5mA or 1-5mA from a control device into a pneumatic signal pressure of 6 bar maximum. The inductive limit switches, positioner indicator and solenoid valves are passive two-terminal.

    The 6116-4 I/P Converter converts a load-independent current into a standard pressure signal in the 0.2 to 1 or 0.4 to 2 bar range. It consists of an I/P Module and a downstream pneumatic amplifier. It is a passive two-terminal network.

13. **Specific Conditions of Use:**

    None

14. **Test and Assessment Procedure and Conditions:**

    This Certificate has been issued in accordance with FM Approvals US Certification Requirements.

15. **Schedule Drawings**

    A copy of the technical documentation has been kept by FM Approvals.

16. **Certificate History**

    Details of the supplements to this certificate are described below:

THIS CERTIFICATE MAY ONLY BE REPRODUCED IN ITS ENTIRETY AND WITHOUT CHANGE

FM Approvals LLC. One Technology Way, Norwood, MA 02062 USA
T: +1 (1) 781 762 4300 F: +1 (1) 781 762 9375 E-mail: information@fmapprovals.com www.fmapprovals.com

SCHEDULE

US Certificate of Conformity No: FM24US0232

Date	Description
28 February 2005	Original Issue.
2 January 2025	Supplement 3: Report Reference: RR243493 dated 2 January 2025. Description of the Change(s): Delist of 3701-3abcd. Solenoid Valve, 3760-31abc. i/p Positioner Single-Acting, and the 3964-3. Pilot Valve with Model 1070-9 Position Indicator Module, Model 1079-27 e/p Binary Converter Coil or Model 1079-29 Solenoid Valve. Re-formatted the certificate. Updated FM 3600.

To verify the availability of the Approved product, please refer to www.approvalguide.com

THIS CERTIFICATE MAY ONLY BE REPRODUCED IN ITS ENTIRETY AND WITHOUT CHANGE

FM Approvals LLC. One Technology Way, Norwood, MA 02062 USA
T: +1 (1) 781 762 4300 F: +1 (1) 781 762 9375 E-mail: information@fmapprovals.com www.fmapprovals.com

ANNEX

3766-3 Pneumatic Positioner Single-Acting

Markings:

IS Class I, II, III, Div. 1, GP A, B, C, D, E, F, G, T* - Addendum to EB 8355-1 EN; Entity; Type 4X
IS Class I, Zn 0, AEx ia IIC, T* - Addendum to EB 8355-1 EN; Entity
NI Class I, Div. 2, GP A, B, C, D, F, G T*
T* = Temperature Class and Ambient Temperature Range per Dwg. Addendum to EB 8355-1 EN

Description of Equipment:

3766-3abc. Pneumatic Positioner Single-Acting with Model 1070-9 Position Indicator Module, Model 1079-27 e/p Binary Converter Coil or Model 1079-29 Solenoid Valve
Entity Parameters:

Position Indicator:
$V_{Max}(U_i)$ = 28 V, $I_{Max}(I_i)$ = 115 mA, $P_{Max}(P_i)$ = 1 W, C_i= 5.3 nF, L_i= 0

Limit Switches (Inductive):
$V_{Max}(U_i)$ = 16 V, $I_{Max}(I_i)$ = 25 mA, $P_{Max}(P_i)$ = 64 mW, C_i= 30 nF, L_i= 100 µH
$V_{Max}(U_i)$ = 16 V, $I_{Max}(I_i)$ = 52 mA, $P_{Max}(P_i)$ = 169 mW, C_i= 30 nF, L_i= 100 µH

Solenoid Valve:
$V_{Max}(U_i)$ = 28 V, $I_{Max}(I_i)$ = 115 mA, $P_{Max}(P_i)$ = 0.25 W, C_i= 0, L_i= 0
Solenoid valve (nominal signal) 6VDC version $P_{Max}(P_i)$ = 250 mW
Solenoid valve (nominal signal) 12VDC and 24VDC version $P_{Max}(P_i)$ not limited

a = Inductive limit switch: 00 (none) or 6 (with position indicator).
b = Solenoid valve with solenoid valve without limit switches: 00 (none), 2 (nominal signal 6V), 3 (nominal 12V) or 4 (nominal 24V).
c = Electrical connections: 1 (cable gland M 20 x 1.5 optionally metal or plastic), 3 (HARTING-connector) or 4 (round connector).

3767-3 I/P Positioner Single-Acting

Markings:

IS Class I, II, III, Div. 1, GP A, B, C, D, E, F, G, T* - Addendum to EB 8355-2 EN; Entity; Type 4X
IS Class I, Zn 0, AEx ia IIC, T* - Addendum to EB 8355-2 EN; Entity
NI Class I, Div. 2, GP A, B, C, D, F, G T*

T* = Temperature Class and Ambient Temperature Range per Dwg. Addendum to EB 8355-2 EN

Description of Equipment:

3767-3abcd. I/P Positioner Single-acting with Model 1070-9 Position Indicator Module, Model 1079-27 e/p Binary Converter Coil or Model 1079-29 Solenoid Valve

Entity Parameters:
$V_{Max}(U_i)$ = 28 V, $I_{Max}(I_i)$ = 115 mA, $P_{Max}(P_i)$ = 0.7 W, C_i= 0, L_i= 0

Position Indicator :
$V_{Max}(U_i)$ = 28 V, $I_{Max}(I_i)$ = 100 mA, $P_{Max}(P_i)$ = 1 W, C_i= 5.3 nF, L_i= 0

Limit Switches (Inductive) :
$V_{Max}(U_i)$ = 16 V, $I_{Max}(I_i)$ = 25 mA, $P_{Max}(P_i)$ = 64 mW, C_i= 30 nF, L_i= 100 µH
$V_{Max}(U_i)$ = 16 V, $I_{Max}(I_i)$ = 52 mA, $P_{Max}(P_i)$ = 169 mW, C_i= 30 nF, L_i= 100 µH

Solenoid Valve :
$V_{Max}(U_i)$ = 28 V, $I_{Max}(I_i)$ = 115 mA, $P_{Max}(P_i)$ = 0.25 W, C_i= 0, L_i= 0

Solenoid valve (nominal signal) 6VDC version $P_{Max}(P_i)$ = 250 mW
Solenoid valve (nominal signal) 12VDC and 24VDC version $P_{Max}(P_i)$ not limited

a = Inductive limit switch: 00 (none) or 6 (with position indicator).
b = Solenoid valve with solenoid valve without limit switches: 00 (none), 2 (nominal signal 6V), 3 (nominal 12V) or 4 (nominal 24V).
c = Electrical connections: 1 (cable gland M 20 x 1.5 optionally metal or plastic), 3 (HARTING-connector) or 4 (round connector).
d = Data not relating to explosion protection such as input signal: 1 (4 to 20mA), 2 (4 to 20mA) or 3 (1 to 5mA).

3768-3 Limit Switch

Markings:

IS Class I, II, III, Div. 1, GP A, B, C, D, E, F, G, T* - Addendum to EB 8356 EN; Entity; Type 4X
IS Class I, Zn 0, AEx ia IIC, T* - Addendum to EB 8356 EN; Entity
NI Class I, Div. 2, GP A, B, C, D, F, G T*
T* = Temperature Class and Ambient Temperature Range per Dwg. Addendum to EB 8356 EN

Description of Equipment:

3768-3abc Limit Switch
Entity Parameters:Limit Switches (Inductive) :
$V_{Max}(U_i)$ = 16 V, $I_{Max}(I_i)$ = 25 mA, $P_{Max}(P_i)$ = 64 mW, C_i= 30 nF, L_i= 100 µH

THIS CERTIFICATE MAY ONLY BE REPRODUCED IN ITS ENTIRETY AND WITHOUT CHANGE

FM Approvals LLC. One Technology Way, Norwood, MA 02062 USA
T: +1 (1) 781 762 4300 F: +1 (1) 781 762 9375 E-mail: information@fmapprovals.com www.fmapprovals.com

$V_{Max}(U_i)$ = 16 V, $I_{Max}(I_i)$ = 52 mA, $P_{Max}(P_i)$ = 169 mW, C_i= 30 nF, L_i= 100 µH
Solenoid Valve :
$V_{Max}(U_i)$ = 28 V, $I_{Max}(I_i)$ = 115 mA, $P_{Max}(P_i)$ = 0.25 W, C_i= 0, L_i= 0
Solenoid valve (nominal signal) 6VDC version $P_{Max}(P_i)$ = 250 mW
Solenoid valve (nominal signal) 12VDC and 24VDC version $P_{Max}(P_i)$ not limited

a = Proximity switches; 1 = one proximity switch SJ-2 SN or 2 = two proximity switches SJ-2 SN
b = Solenoid valve 0 = none, 2 = nominal signal 6Vdc, 3 = nominal signal 12Vdc or 4 = nominal signal 24Vdc.
c = Electrical connections according to section 5 of the annex: air connections attachment, special versions.

3963-3 Solenoid Valve

Markings:

IS Class I, II, III, Div. 1, GP A, B, C, D, E, F, G, T* - Addendum to EB 3963; Entity; Type 4X
IS Class I, Zn 0, AEx ia IIC, T* - Addendum to EB 3963 EN; Entity
NI Class I, Div. 2, GP A, B, C, D, F, G T*
T* = Temperature Class and Ambient Temperature Range per Dwg. Addendum to EB 3963 EN

Description of Equipment:

3963-3abcd. Solenoid Valve with Model 1079-27 e/p Binary Converter Coil
Entity Parameters:
$V_{Max}(U_i)$ = 28 V, $I_{Max}(I_i)$ = 115 mA, $P_{Max}(P_i)$ = 0.25 W, C_i= 0, L_i= 0
Solenoid Valve (nominal signal) 6VDC version $P_{Max}(P_i)$ = 250 mW
Solenoid valve (nominal signal) 12VDC and 24VDC version $P_{Max}(P_i)$ not limited

a = Nominal signal: 1 (6 volts), 2 (12 volts) or 3 (24 volts).
b = Pneumatic switching functions: attachment with or without functional test.
c = Ambient temperatures: 0 (= -20°C +80°C) or 1 (= - 45°C +80°C).
d = Electrical Connection: Connection thread type of protection or manual operation

---

4746-3 Limit Switch

Markings:

IS Class I, II, III, Div. 1, GP A, B, C, D, E, F, G, T* - Addendum to EB 8365 EN; Entity; Type 3R
IS Class I, Zn 0, AEx ia IIC, T* - Addendum to EB 8365 EN; Entity
NI Class I, Div. 2, GP A, B, C, D, F, G T*
T* = Temperature Class and Ambient Temperature Ran ge per Dwg. Addendum to EB 8365 EN

Description of Equipment:

THIS CERTIFICATE MAY ONLY BE REPRODUCED IN ITS ENTIRETY AND WITHOUT CHANGE

FM Approvals LLC. One Technology Way, Norwood, MA 02062 USA
T: +1 (1) 781 762 4300 F: +1 (1) 781 762 9375 E-mail: information@fmapprovals.com www.fmapprovals.com

Model 4746-3abc. Limit Switch
Entity Parameters:
Limit Switches (Inductive):
Terminals 41/42 & 51/52 GP ABCDEFG and GP IIC:
Vmax (Ui) = 16V, Imax (Ii) = 25mA, Pmax (Pi) = 34mW, Ci = 150nF, Li = 150µH
Vmax (Ui) = 16V, Imax (Ii) = 25mA, Pmax (Pi) = 64mW, Ci = 60nF, Li = 250µH
Vmax (Ui) = 16V, Imax (Ii) = 52mA, Pmax (Pi) = 169mW, Ci = 50nF, Li = 250µH
Limit Switches (Electrical):
Vmax (Ui) = 45V, Imax (Ii) = 115mA, Pmax (Pi) = 2W, Ci = 0, Li = 0

a = Proximity switches;
2 = with inductive proximity switches
3 = with electrical proximity switches.
b = Contact Types;
00 = type SC3,5 inductive contact
10 = type SJ3,5-SN inductive contact
11 = type SJ3,5-S1N inductive contact
20 = type XGK 3 electrical contact (silver)
21 = type XGK 3-81 electrical contact (gold)
c = Switching elements;
1 = one contact
2 = two contacts

4763-3 I/P Positioner Single-Acting

Markings:

IS Class I, II, III, Div. 1, GP A, B, C, D, E, F, G, T* - Addendum to EB 8359-2 EN; Entity; Type 3R
IS Class I, Zn 0, AEx ia IIC, T* - Addendum to EB 8359-2 EN; Entity
NI Class I, Div. 2, GP A, B, C, D, F, G T*
T* = Temperature Class and Ambient Temperature Range per Dwg. Addendum to EB 8359-2 EN

Description of Equipment:

4763-3abc I/P Positioner Single-Acting
Entity Parameters:
$V_{Max}(U_i)$ = 28 V, $I_{Max}(I_i)$ = 115 mA, $P_{Max}(P_i)$ = 0.7 W, C_i= 0, L_i= 0

a = Electrical connections: 1 (cable gland M 20 x 1.5 metal or plastic), 3 (HARTING-connector) or 4 (round connector).
b = i/p-Baustein: 1 (Model 6109 I/P Module) or 2 (Model 6112 I/P Module).
c = Input signal (signal circuit): 1 (0-20mA), 2 (4-20mA) or 3 (1-5mA).

THIS CERTIFICATE MAY ONLY BE REPRODUCED IN ITS ENTIRETY AND WITHOUT CHANGE

FM Approvals LLC. One Technology Way, Norwood, MA 02062 USA
T: +1 (1) 781 762 4300 F: +1 (1) 781 762 9375 E-mail: information@fmapprovals.com www.fmapprovals.com

6116-4 I/P Converter

Markings:

IS Class I, II, III, Div. 1, GP A, B, C, D, E, F, G, T* - Addendum to EB 6116 EN; Entity; Type 4X
IS Class I, Zn 0, AEx ia IIC, T* - Addendum to EB 6116 EN; Entity
NI Class I, Div. 2, GP A, B, C, D, F, G T*
T* = Temperature Class and Ambient Temperature Range per Dwg. Addendum to EB 6116 EN

Description of Equipment:

6116-4abcd. I/P Converter
Entity Parameters:
$V_{Max}(U_i)$ = 28 V, $I_{Max}(I_i)$ = 115 mA, $P_{Max}(P_i)$ = 0.7 W, C_i= 0, L_i= 0

a = input and output variables not relating to explosion protection
b = Type of protection 0 (no protection) or 2 (Ex version to input circuit category ia).
c = Style 1 module for controllers or further devices.
d = Input and output signals not related to explosion protection

THIS CERTIFICATE MAY ONLY BE REPRODUCED IN ITS ENTIRETY AND WITHOUT CHANGE

FM Approvals LLC. One Technology Way, Norwood, MA 02062 USA
T: +1 (1) 781 762 4300 F: +1 (1) 781 762 9375 E-mail: information@fmapprovals.com www.fmapprovals.com

Physikalisch-Technische Bundesanstalt
Braunschweig und Berlin

TRANSLATION

(1) # Statement of conformity

(2) Equipment and Protective Systems Intended for Use in Potentially Explosive Atmospheres – **Directive 94/9/EC**

(3) EC Type Examination Certificate Number

PTB 01 ATEX 2086 X

(4) Equipment: Model 3963-8.. Solenoid Valve

(5) Manufacturer: SAMSON AG Mess- und Regeltechnik

(6) Address: Weismüllerstr. 3, 60314 Frankfurt am Main, Germany

(7) The equipment and any acceptable variation thereof are specified in the schedule to this certificate and the documents referred to therein.

(8) The Physikalisch-Technische Bundesanstalt, notified body number 0102 according to Article 9 of the Council Directive 94/9/ of 23 March 1994, certifies that this equipment has been found to comply with the essential health and safety requirements relating to the design and construction of equipment and protective systems intended for use in potentially explosive atmospheres specified in Annex II to the Directive.

The examination and test results are recorded in confidential report: **PTB Ex 01-21204**

(9) The essential health and safety requirements are satisfied by compliance with

EN 50021: 1999

(10) If the sign "X" is placed after the certificate number, it indicates that the equipment is subject to special conditions for safe use as specified in the schedule to this certificate.

(11) In compliance with the Directive 94/9/Ex this Statement of Conformity relates only to the design and construction of the equipment specified. Further requirements of this Directive apply to manufacture and marketing of this equipment.

Statement of Conformity without signature and seal are invalid.
This Statement of Conformity may only be reproduced in its entirety and without any changes, schedule included.
Extracts or changes shall require the prior approval of the Physikalisch-Technische Bundesanstalt.

(12) The marking of the equipment shall include the following:

 **II 3 G EEx nA II T6**

Zertifizierungsstelle Explosionsschutz
By order

Braunschweig, 14 November 2001

(Signature) (Seal)

Dr. Ing. U. Johannsmeyer
Regierungsdirektor

Statement of Conformity without signature and seal are invalid.
This Statement of Conformity may only be reproduced in its entirety and without any changes, schedule included.
Extracts or changes shall require the prior approval of the Physikalisch-Technische Bundesanstalt.

(13) # Schedule

(14) **Statement of Conformity PTB 01 ATEX 2086 X**

(15) **Description of Equipment**

The model 3963-8.. Solenoid Valve converts electrical binary signals in the input circuit into pneumatic output signals. It is intended for attachment to actuators and for constructing control systems.

The correlation between the version, temperature classification and permissible ambient temperature ranges is shown in the table below:

Version (U_N)		6V	12V	24V
Temperature class	T6	60°C		
	T5	-45°C ≤ T_a ≤ 70°C		
	T4	80°C		

(16) **Test report PTB Ex 01-21204**

(17) **Special conditions for safe use**

1. The Model 3963-8.. Solenoid valve shall be installed in an enclosure providing at least Degree of Protection IP 54 according to IEC Publication 60529:1989.

2. The wiring shall be connected in such a manner that the connection facilities are free of tensile and torsional load.

(18) **Special health and safety requirements**

In compliance with the standard specified above.

Zertifizierungsstelle Explosionsschutz
By order

Braunschweig, 14 November 2001

(Signature) (seal)

Dr. Ing. U. Johannsmeyer
Regierungsdirektor

Statement of Conformity without signature and seal are invalid.
This Statement of Conformity may only be reproduced in its entirety and without any changes, schedule included.
Extracts or changes shall require the prior approval of the Physikalisch-Technische Bundesanstalt.

Physikalisch-Technische Bundesanstalt

Braunschweig und Berlin

1. SUPPLEMENT

to CONFORMITY STATEMENT PTB 01 ATEX 2086 X

(Translation)

Equipment: Solenoid, type 3963-8..

Marking: ⟨Ex⟩ **II 3 G EEx nA II T6**

Manufacturer: SAMSON AG Mess- und Regeltechnik

Address: Weismüllerstr. 3, 60314 Frankfurt, Germany

Description of supplements and modifications

The solenoid of type 3963-8.. converts binary electrical signals into pneumatic output signals. It is intended for installation onto actuators and for the configuration of control systems.

The solenoid of type 3963-8.. is supplemented by type 3963-8.....25. This model is provided with a cubic LED-plug showing the operational state of the equipment.
Further modifications have not been made.

The equipment is installed inside of the hazardous area.

The permissible thermal and electrical maximum values are presented in summary.

For relationship between temperature class and permissible thermal maximum values, reference is made to the following table:

3963-8..	T6	60 °C
	T5	-45 °C ... 70 °C
	T4	80 °C
3963-8.....25	T6	55 °C
	T5	-45 °C ... 70 °C
	T4	80 °C

ZSEx10201e.doim

Electrical data

The solenoid of type 3963-8.. is suitable for nominal voltages of 6 V, 12 V and 24 V when appropriate resistors are connected in series.

Conformity Statements without signature and official stamp shall not be valid. The certificates may be circulated only without alteration. Extracts or alterations are subject to approval by the Physikalisch-Technische Bundesanstalt.
In case of dispute, the German text shall prevail.

Physikalisch-Technische Bundesanstalt • Bundesallee 100 • 38116 Braunschweig • GERMANY

1. SUPPLEMENT TO CONFORMITY STATEMENT PTB 01 ATEX 2086 X

For relationship between model, nominal signal and maximum permissible electrical power, reference is made to the following table:

Signal circuit .....type of protection Ex ic IIC
(terminals 11/12) or Ex nA II

Model		3963-81	3963-82	3963-83
Nominal signal	U_N	6 V	12 V	24 V
Temperature class	T6	60 °C		
	T5	-45 °C ... 70 °C		
	T4	80 °C		
	P_i	No limitation		

or

Signal circuit .....type of protection Ex ic IIC
(terminals 11/12)

For permissible electrical maximum values, reference is made to the following table:

U_i	25 V	27 V	28 V	30 V	32 V
I_i	150 mA	125 mA	115 mA	100 mA	85 mA

C_i negligibly low
L_i negligibly low

Special conditions

The solenoid of type 3963-8.. shall be mounted into an enclosure that guarantees a minimum degree of protection of IP 54 according to IEC 60529.

The cables shall be connected in such a way that the connecting points are not subjected to tensile or torsional stress.

All further specifications of the conformity statement apply without changes also to this supplement.

The future marking reads:

II 3 G Ex ic IIC T6 Gc	**or**	**II 3 G Ex nA II T6 Gc**	alternatively
II 3 G Ex ic IIC T6	**or**	**II 3 G Ex nAc II T6**	

Conformity Statements without signature and official stamp shall not be valid. The certificates may be circulated only without alteration. Extracts or alterations are subject to approval by the Physikalisch-Technische Bundesanstalt.
In case of dispute, the German text shall prevail.

Physikalisch-Technische Bundesanstalt • Bundesallee 100 • 38116 Braunschweig • GERMANY

Physikalisch-Technische Bundesanstalt

Braunschweig und Berlin

1. SUPPLEMENT TO CONFORMITY STATEMENT PTB 01 ATEX 2086 X

Applied standards

EN 60079-0:2009 **EN 60079-11:2012** **EN 60079-15:2010**

Test report: PTB Ex 14-23193

Zertifizierungssektor Explosionsschutz
By order:

Dr.-Ing. T. Horn

Braunschweig, April 17, 2014

Conformity Statements without signature and official stamp shall not be valid. The certificates may be circulated only without alteration. Extracts or alterations are subject to approval by the Physikalisch-Technische Bundesanstalt.
In case of dispute, the German text shall prevail.

Physikalisch-Technische Bundesanstalt • Bundesallee 100 • 38116 Braunschweig • GERMANY

15 Appendix

15.1 Accessories

Table 10: *Accessories for Type 3963 Solenoid Valves*

Designation	Order no.
Cable socket according to EN 175301-803, black polyamide, type A, three-pole, with PG 9 cable gland and gasket of nitrile butadiene rubber, degree of protection IP65	0790-6658
Cable socket with LED according to EN 175301-803, form A, made of black polyamide, degree of protection IP65	1170-4069
Cable breakage protection with activation delay, enclosure for 35 mm rail mounting, IP20 (for Type 3963-X1 with 6 V DC nominal signal)	3994-0160
Filter made of polyethylene, G 1/G ½ connection, degree of protection IP54 (required for actuator size >1400 cm²)	1400-5268
Muffler made of polyethylene, G ¼ connection, degree of protection IP54	8504-0066
Muffler made of polyethylene, G ½ connection, degree of protection IP54	8504-0068
Filter check valve in housing with G ¼ thread made of polyamide, degree of protection IP65	1790-7408
Filter check valve in housing with G ¼ thread made of 1.4301, degree of protection IP65	1790-7253
Filter check valve in housing with G ¼ thread made of polyamide, degree of protection NEMA 4	1790-9645
Filter check valve in housing with G ¼ thread made of 1.4301, degree of protection NEMA 4	1790-9646
Mounting base for G-profile rail 32 according to EN 50035 (2 pcs. required)	1400-5930
Mounting base for 35 mm top-hat rail according to EN 50022 (2 pcs. required)	1400-5931
Mounting plate for wall mounting including fastening screws	1400-6726
Vent plug G ¼, polyamide, degree of protection IP65	1991-0451

Table 11: *Mounting kits for Type 3963 Solenoid Valves with threaded connections*

Designation	Order no.
Mounting kit for linear actuators, 175 and 240 cm² actuator area, G ¼ connection, with pipe fitting, G ¼/G ¼ connection, made of CrNiMo steel	1400-6759
Mounting kit for linear actuators, 350, 355, 700 and 750 cm² actuator area, G ⅜ connection	
with pipe fitting, G ½/G ⅜ connection, made of CrNiMo steel	1400-6735
with pipe fitting, G ¼/G ⅜ connection, made of CrNiMo steel	1400-6761
Mounting kit for linear actuators, 1000 and 1400-60 cm² actuator area, G ¾ connection with pipe fitting, G ½/G ¾ connection, made of CrNiMo steel	1400-6736
Mounting kit for linear actuators, 1400-120, 1400-250, 2800 and 2x 2800 cm² actuator area, G 1 connection, with pipe fitting, G ½/G 1 connection, made of CrNiMo steel	1400-6737
Mounting kit for linear actuators, 175 and 240 cm² actuator area, G ¼ connection, with mounting bracket made of CrNiMo steel	
and screw fittings for 8×1 pipe, G ¼/G ¼ connection, made of zinc-plated steel	1400-6749
and screw fittings for 8×1 pipe, G ¼/G ¼ connection, made of CrNiMo steel	1400-6750
Mounting kit for linear actuators, 350, 355, 700 and 750 cm² actuator area, G ⅜ connection, with mounting bracket of CrNiMo steel	
and screw fittings for 8×1 pipe, G ¼/G ⅜ connection, made of zinc-plated steel	1400-6738
and screw fittings for 8×1 pipe, G ¼/G ⅜ connection, made of CrNiMo steel	1400-6739
and screw fittings for 12×1 pipe, G ¼/G ⅜ connection, made of CrNiMo steel	1400-6743
and screw fittings for 10×1 pipe, G ½/G ⅜ connection, made of polyamide	1400-6744
and screw fittings for 10×1 pipe, G ¼/G ⅜ connection, made of polyamide	1400-6745

Designation	Order no.
Mounting kit for linear actuators, 700 and 750 cm² actuator area, G ⅜ connection, with mounting bracket of CrNiMo steel	
and screw fittings for 12×1 pipe, G ½/G ⅜ connection, made of zinc-plated steel	1400-6740
and screw fittings for 12×1 pipe, G ¼/G ⅜ connection, made of zinc-plated steel	1400-6741
and screw fittings for 12×1 pipe, G ½/G ⅜ connection, made of CrNiMo steel	1400-6742

Table 12: *Mounting kits for Type 3963 Solenoid Valves with NAMUR interface*

Designation	Order no.
Mounting kit for linear actuators, 350, 355, 700 and 750 cm² actuator area, G ⅜ connection, with NAMUR rib using adapter plate for NAMUR rib/NAMUR interface	
Adapter plate for NAMUR rib/NAMUR interface	1400-6751
and screw fittings for 12×1 pipe, G ¼/G ⅜ connection, made of zinc-plated steel	1400-6746
and screw fittings for 12×1 pipe, G ¼/G ⅜ connection, made of CrNiMo steel	1400-6747
and screw fittings for 10×1 pipe, G ¼/G ⅜ connection, made of polyamide	1400-6748
Mounting kit for linear actuators, 175, 240 cm² actuator area, G ¼ connection, with NAMUR rib using adapter plate for NAMUR rib/NAMUR interface	
Adapter plate for NAMUR rib/NAMUR interface	1400-6751
and screw fittings for 6×1 pipe, G ¼/G ¼ connection, made of zinc-plated steel	1400-6752
and screw fittings for 6×1 pipe, G ¼/G ¼ connection, made of CrNiMo steel	1400-6753
and screw fittings for 10×1 hose, G ¼/G ¼ connection, made of polyamide	1400-6756
Mounting kit for linear actuators, 350, 355, 700 and 750 cm² actuator area, G ⅜ connection, with NAMUR rib using adapter plate for NAMUR rib/NAMUR interface	
Adapter plate for NAMUR rib/NAMUR interface	1400-6751
and screw fittings for 8×1 pipe, G ¼/G ⅜ connection, made of zinc-plated steel	1400-6754
and screw fittings for 8×1 pipe, G ¼/G ⅜ connection, made of CrNiMo steel	1400-6755
and screw fittings for 10×1 pipe, G ¼/G ⅜ connection, made of polyamide	1400-6757
Mounting kit for linear actuators, 175 and 240 cm² actuator area, G ¼ connection, with pipe fitting, G ¼/G ¼ connection, made of CrNiMo steel	1400-6759
Mounting kit for Type 3353 Angle Seat Valve with adapter plate for NAMUR interface made of 1.4301	1400-3001

Table 13: *Accessories for mounting kits*

Designation	Order no.
Support for NAMUR rib (required when a positioner or limit switch is additionally attached to a linear actuator mounted on a valve, DN 50)	0320-1416
M8x60 hex screw, A4, DIN 931	8320-0131
Adapter plate for NAMUR interface on NAMUR rib, G ¼	1400-6751
Adapter plate for NAMUR rib/NAMUR interface, Ematal coating, ¼ NPT connection	1400-9924
Connection block for Type 3277 Linear Actuator with mounted Types 3766, 3767, 3793 and 3730 Positioners	
G ¼ connection	1400-8813
¼ NPT connection	1400-8814
Pressure gauge mounting block, 1x Output and 1x Supply, made of stainless steel/brass, for connection block	1400-6950

Designation	Order no.
Piping for actuator with fail-safe action “stem retracts”	
240 cm² actuator area, zinc-plated steel	1400-6444
240 cm² actuator area, CrNiMo steel	1400-6445
350 cm² actuator area, zinc-plated steel	1400-6446
350 cm² actuator area, CrNiMo steel	1400-6447
700 cm² actuator area, zinc-plated steel	1400-6448
700 cm² actuator area, CrNiMo steel	1400-6449

15.2 After-sales service

Contact our after-sales service for support concerning service or repair work or when malfunctions or defects arise.

E-mail contact

You can reach our after-sales service at the following e-mail address:

▶ aftersalesservice@samsongroup.com

Addresses of SAMSON AG and its subsidiaries

The addresses of SAMSON AG, its subsidiaries, representatives and service facilities worldwide can be found on our website (▶ www.samsongroup.com) or in all product catalogs.

Required specifications

Please submit the following details:

- Order number and position number in the order
- Type designation
- Model number
- Configuration ID
- Serial number
- Other mounted valve accessories (positioner, supply pressure regulator etc.)
- Pressure
- Conductor cross-section
- Actuator type and manufacturer

SAMSON AKTIENGESELLSCHAFT
Weismüllerstraße 3 · 60314 Frankfurt am Main, Germany
Phone: +49 69 4009-0 · Fax: +49 69 4009-1507
samson@samsongroup.com · www.samsongroup.com

2026-10-21 | English | 4000299781 | 1.13