DATA SHEET

T 2521 EN

Type 2405 Pressure Reducing Valve

Self-operated Pressure Regulators · ANSI version

Application

Pressure regulators for set points from **0.03** to **145 psi** · Nominal sizes **NPS ½** to **2** · Pressure rating **Class 125** to **300** · Suitable for liquids, gases and vapors · Temperature range from **-5** to **140 °F** (**32** to **300 °F**)[1)]

The valve **closes** when the **downstream** pressure rises.



Special features

- Low-maintenance regulator functioning as proportional or two-step controller; requiring no auxiliary energy
- Compact regulator design providing excellent control accuracy
- Internal set point springs with set point adjustment using a set point adjuster on the actuator
- Spring-loaded, single-seated valve balanced by a balancing diaphragm
- External connection of a control line
- Meets strict fugitive emission requirements
- Based on the fugitive emission requirements according to TA Luft (TA Luft compliant)[2)]
- Minimum leakage class IV

1) For versions without pressure balancing that have an FKM diaphragm and FKM soft seal

2) Applies to 12.5 to 100 in² actuator area, actuator diaphragm made of EPDM or FKM and temperature range 32 to 300 °F

This regulator is used to control the pressure of flammable gases used as a source of energy (e.g. in boilers, driers, vaporizers, heat exchangers or industrial ovens). Alternatively, it can control the compressed air supply in process engineering applications.

An additional application of the regulator is the pressure control of inert gas used for inerting or blanketing reaction or storage tanks to protect the product in the tank from oxidation, explosion or escaping. To achieve an economical consumption of the inert gas, its pressure must be controlled to always remain slightly higher than atmospheric pressure while the tank is being filled or emptied.

Versions

Pressure reducing valve to regulate the downstream pressure p_2 to the adjusted set point. The valve **closes** when the **downstream** pressure rises.

Pressure reducing valve with proportional control action

– Valves in NPS ½ to 2 · Flanged connections · Plug with soft seal · Body made of cast iron, cast steel or cast stainless steel

SAMSON AKTIENGESELLSCHAFT
Weismüllerstraße 3 · 60314 Frankfurt am Main, Germany
Phone: +49 69 4009-0 · samson@samsongroup.com · www.samsongroup.com

Edition September 2026

Pressure reducing valve with two-step control mode for millibar set point ranges

– Valves in NPS 1½ to 2 · Flanged connections · Plug with soft seal · Body made of cast iron, cast steel or cast stainless steel

Special versions

– FDA version[1)]
– NACE version for sour gas applications
– Version with force limiter (for higher pressures across the operating diaphragm)
– Actuator with seal and leakage line connection
– Version with connected control line. Pressure tapped directly at the valve body; optionally also with pressure gauge

1) This version is not suitable for direct contact with products manufactured in the food and pharmaceutical industries. It can only be used close to the product.

Design and principle of operation

The medium flows through the regulator in the direction indicated by the arrow. The position of the plug (3) determines the cross-sectional area of flow between the plug and the seat (2).

– **Pressure reducing valve with proportional control action (see Fig. 1**)

In the pressureless state (control line not connected and no pressure applied) the valve is opened by the force of the set point springs (27). The spring force can be adjusted at the set point adjuster (30).

The downstream pressure p_2 to be controlled is tapped downstream of the regulator and transmitted over an external control line to the control line connection (9) on the actuator housing (20) where it is converted into a positioning force by the diaphragm plate (18) with operating diaphragm (21). The diaphragm moves the plug over the plug stem (4) depending on the force of the set point springs.

When the force resulting from the downstream pressure p_2 rises above the spring force adjusted at the set point springs, the valve closes proportionally to the change in pressure.

In the version with pressure balancing, the forces produced by the upstream and downstream pressures acting on the plug are eliminated by the balancing diaphragm (8). The plug is fully balanced.

– **Pressure reducing valve with two-step control mode (see Fig. 4**)

The regulator (nominal sizes NPS 1½ and 2, C_V 20 and 37 with set point ranges from 0.03 to 0.87 psi) operates as a two-step controller.

A differential pressure of at least 23.2 psi is required for the regulator to work properly.

In the idle state, the valve is closed when the pressure in the bottom actuator chamber is equal or higher than the set point. The set point is adjusted by tensioning the set point spring (27) at the set point adjuster (30).

The upstream pressure p_1 is routed through a hole in the plug stem to the chamber of the plug balancing unit above the balancing diaphragm (8). The valve is pressure balanced in this way.

The required closing force of the plug is generated by the compression spring (542) in the chamber.

If the downstream pressure p_2 being controlled drops below the lower switching point of the adjusted set point, the force created by the diaphragm (21) is lower than the force of the set point spring (27). This causes the diaphragm plate (18), which is attached to the actuator stem (540), to be pushed down moving towards the plug. This results in a force being exerted on the tappet, which is part of the assembly (535) of the internal bypass valve.

The pressure in the balancing chamber is relieved to the downstream side.

The balancing pressure drops until it reaches the level of the downstream pressure p_2. As a result, the upstream pressure exerted on the plug is able to fully open the valve opposing the force of the compression spring (542).

If the downstream pressure p_2 starts to rise again and reaches the upper switching point of the adjusted set point, the diaphragm plate (18) and actuator stem (540) move upward. The internal bypass valve closes and the upstream pressure p_1 starts to build up again in the chamber of the plug balancing unit above the balancing diaphragm (8). The pressure-balanced state of the valve is restored and the compression spring (542) causes the plug to close.

The two-step control mode is determined by a switching accuracy of ≤0.022 psi between the upper and lower switching point.

The regulator is additionally fitted with a shipping lock (222, 223), which must be removed before start-up. This is indicated by a yellow label (224) on the regulator. The shipping lock prevents any shocks or impacts from being transferred to the control unit, which could damage it.

The valve **closes** when the **downstream** pressure **rises**.

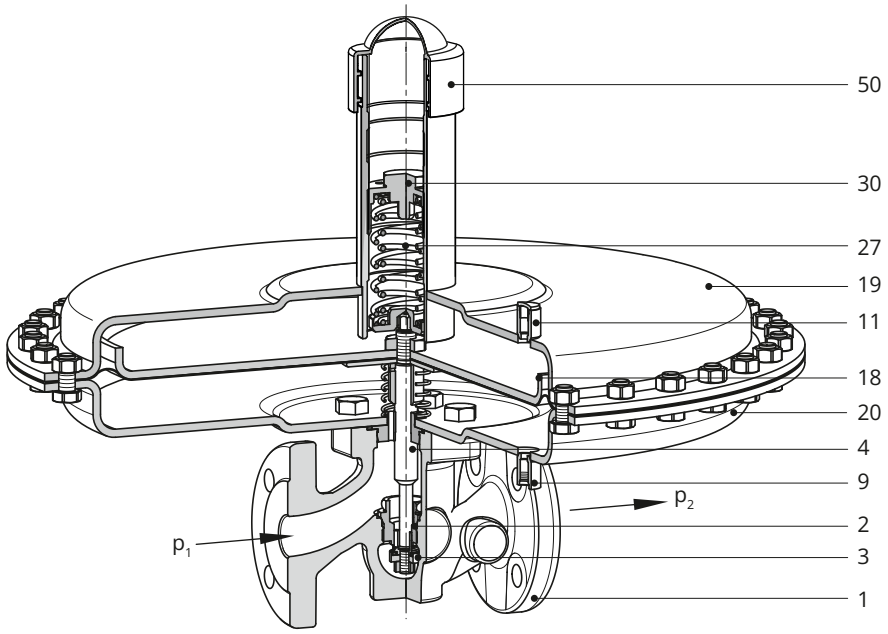

Fig. 1: *Type 2405 Pressure Reducing Valve without pressure balancing · C_V 2 to 5 · Flow-to-open*

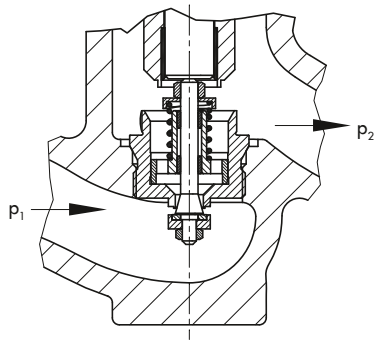

Fig. 2: *Type 2405 Pressure Reducing Valve without pressure balancing · C_V 0.02 to 1.2 · Flow-to-close*

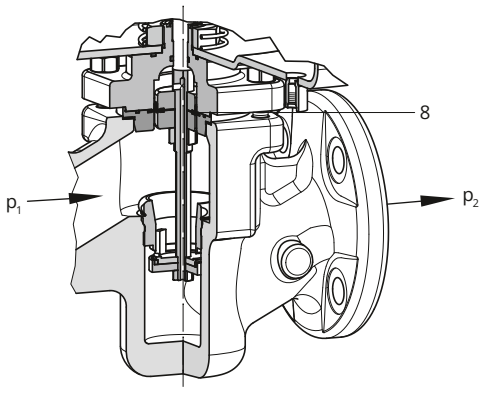

Fig. 3: *Type 2405 Pressure Reducing Valve with pressure balancing · C_V 7.5 to 37*

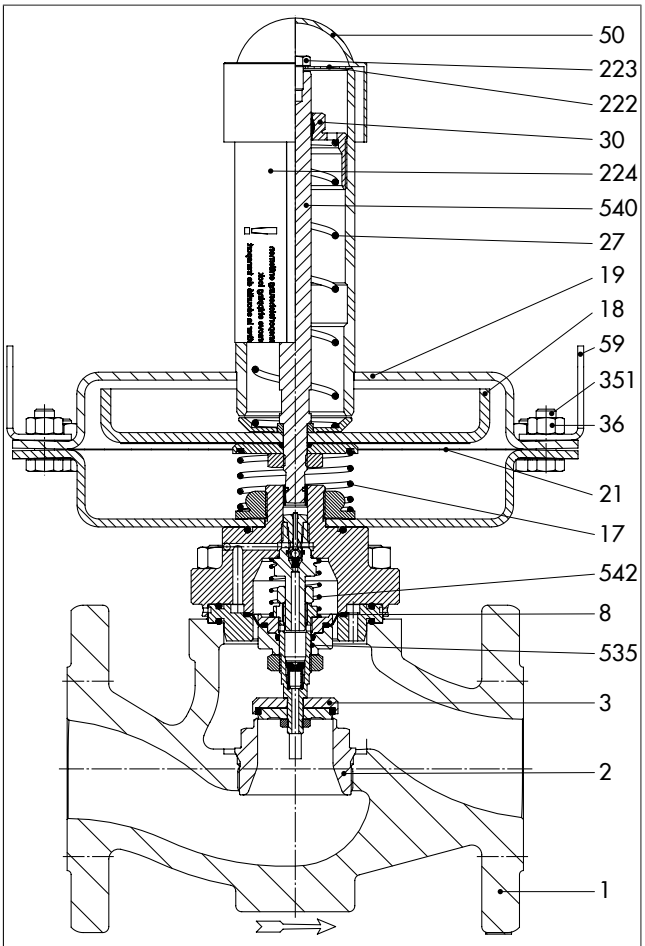

Fig. 4: *Type 2405 Pressure Reducing Valve with pressure balancing · Nominal size NPS 1½ to 2 · Set points 0.03 to 0.87 psi · Flow-to-open (two-step control mode)*

Legend for Figs. 1 to 4

1 Valve body
2 Seat
3 Plug
4 Plug stem (regulator with proportional control action only)
8 Balancing diaphragm
9 Control line connection, G ¼ fitting
11 Leakage line connection (special version), G ¼ fitting
17 Compensation spring
18 Diaphragm plate
19 Top actuator case
20 Bottom actuator case
21 Operating diaphragm
27 Set point spring
30 Set point adjuster (A/F 27)
36 Nut
50 Cap
59 Lifting eyelet (on the right and left-hand side of the actuator)
222 Shipping lock washer
223 Shipping lock screw (A/F 13)
224 Label
351 Screw
535 Plug assembly (regulator with two-step control mode only)
540 Actuator stem
542 Compression spring (closing spring of the plug)

Table 1: *Materials*

Valve body	**Cast iron A126B, cast steel A216 WCC**	**Cast stainless steel A351 CF8M**
Seat, plug and plug stem	316L	
Plug spring	1.4310[1)]	
Seal and balancing diaphragm	EPDM · FKM · NBR	
Actuator housing	1.0332	1.4301
Operating diaphragm	EPDM · FKM · NBR	

1) Only with C_V 0.12 to 1.2

Table 2: *K_{VS} coefficients*

Nominal size	**NPS ½**	**NPS ¾**	**NPS 1**	**NPS 1½**	**NPS 2**
C_V (standard version)	5.0	7.5	9.4	23[1)]	37[1)]
C_V (reduced)	0.02 · 0.05 · 0.12 · 0.3 · 0.5 · 1.2 · 2 · 3	0.02 · 0.05 · 0.12 · 0.3 · 0.5 · 1.2 · 2 · 3 · 5	0.02 · 0.05 · 0.12 · 0.3 · 0.5 · 1.2 · 2 · 3 · 5 · 7.5	2 · 3 · 5 · 7.5 · 9.4 · 20	2 · 3 · 5 · 7.5 · 9.4 · 20 · 23

1) For regulator version with two-step mode; only standard C_V coefficients possible

Table 3: *Technical data · All pressures in psi (gauge)*

Nominal size		NPS ½	NPS ¾	NPS 1	NPS 1½	NPS 2
Pressure rating (valve)		Class 125[6], 150, 300				
Max. permissible differential pressure Δp		150 psi · 175 psi [1]				
Min. required differential pressure Δp[5]		–			23.2 psi	
Switching accuracy[5]					≤0.022 psi	
Max. permissible temperature range (medium temperature)		-5 to +140 °F (32 to 300 °C)[2]				
Set point ranges		0.03 to 0.25 psi[5] · 0.075 to 0.25 psi · 0.15 to 0.42 psi · 0.35 to 0.87 psi 0.75 to 3 psi · 1.5 to 8 psi · 3 to 15 psi · 10 to 37.5 psi · 30 to 75 psi · 65 to 145 psi				
Max. perm. pressure at operating diaphragm	186 in²	0.075 to 0.25 psi			0.03 to 0.25 psi[5] · 0.15 to 0.42 psi	
		7 psi				
	100 in²	0.15 to 0.42 psi · 0.35 to 0.87 psi			0.35 to 0.87 psi	
		14.5 psi				
	50 in²	0.75 to 3 psi · 1.5 to 8 psi				
		30 psi · 145 psi[3]				
	25 in²	3 to 15 psi				
		45 psi · 240 psi[3]				
	12.5 in²	10 to 37.5 psi				
		75 psi · 240 psi[3]				
	6 in²	30 to 75 psi				
		145 psi · 240 psi[3]				
		65 to 145 psi				
		220 psi · 240 psi[3]				
Pressure balancing	C_V 0.02 to 5	Without balancing diaphragm				
	C_V 7.5 to 37	With balancing diaphragm				
Pressure tapping		External[4]				
Control line connection		G ¼ (¼ NPT with adapter)				
Leakage class according to DIN EN 60534-4		Soft seal, minimum Class IV				
Conformity		CE				

1) Version with set points from 1.5 to 150 psi

2) For versions without pressure balancing that have an FKM diaphragm and FKM soft seal

3) Version with force limiter

4) Special version for 6, 12.5 and 25 in² actuator areas with pressure tapping directly at the valve

5) For the regulator version with two-step control mode only

6) Not in NPS ½ and ¾

Table 4: *Weights in lbs*[1)]

	Nominal size	NPS ½ to 1	NPS 1½ to 2
Set point range	0.03 to 0.25 psi[2)]	–	88.2
	0.075 to 0.25 psi	61.7	
	0.15 to 0.42 psi	39.7	
	0.35 to 0.87 psi	30.9	66.1
	0.75 to 3 psi · 1.5 to 8 psi		57.3
	3 to 15 psi	22	48.5
	10 to 35 psi · 30 to 75 psi	17.6	44.1
	65 to 150 psi	19.8	46.3

1) Body made of A216 WCC and A351 CF8M: +10 %

2) For the regulator version with two-step control mode only

Dimensional drawings

NPS ½ to 1
Control line connection G ¼ (¼ NPT with adapter)
A = 6 in² · 12.5 in² · 25 in² · 50 in²

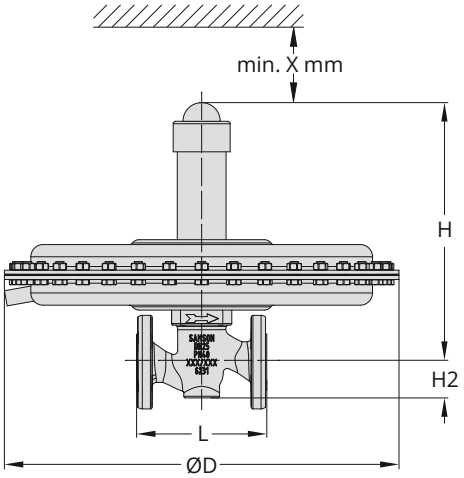

NPS 1½ to 2
Control line connection G ¼ (¼ NPT with adapter)
A = 100 in² · 186 in²

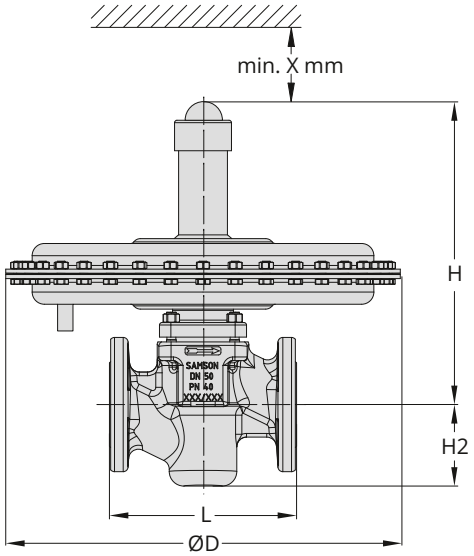

Fig. 5: *Dimensions of Type 2405*

Table 5: *Dimensions in inches*

Nominal size				NPS ½	NPS ¾	NPS 1	NPS 1½	NPS 2
Length L		Cl 125		–		7.3"	8.8"	10"
		Cl 150		7.3"				
		Cl 300		7.5"	7.6"	7.8"	9.3"	10.5"
Height H2		Forged steel		2.1"	–	2.8"	3.7"	3.9"
		Other materials		1.8"			2.8"	
Height X				5.9"				
Set point ranges	0.03 to 0.25 psi[1]	Height H	Without balancing	–			–	
			With balancing	–			15.2"	
		Actuator		–			ØD = 19.1", A = 186 in²	
	0.075 to 0.25 psi	Height H	Without balancing	12.8"			14.6"	
			With balancing	13.9"			15.2"	
		Actuator		ØD = 19.1", A = 186 in²				
	15 to 0.42 psi	Height H	Without balancing	12.6"			14.4"	
			With balancing	13.6"			15.2"[1]	
		Actuator		ØD = 15", A = 100 in²			ØD = 19.1", A = 186 in²	
	0.35 to 0.87 psi	Height H	Without balancing	12.6"			14.4"	
			With balancing	13.6"			15"[1]	
		Actuator		ØD = 11.2", A = 50 in²			ØD = 15", A = 100 in²	
	0.75 to 3 psi	Height H	Without balancing	12.6"			14.4"	
			With balancing	13.6"			14.6"	
		Actuator		ØD = 11.2", A = 50 in²				
	1.5 to 8 psi	Height H	Without balancing	12.6"			14.4"	
			With balancing	13.6"			14.6"	
		Actuator		ØD = 11.2", A = 50 in²				
	3 to 15 psi	Height H	Without balancing	12.6"			14.4"	
			With balancing	13.6"			14.6"	
		Actuator		ØD = 8.9", A = 25 in²				
	10 to 35 bar	Height H	Without balancing	13"			14.4"	
			With balancing	14"			14.6"	
		Actuator		ØD = 6.7", A = 12 in²				
	30 to 75 psi	Height H	Without balancing	13.2"			14.5"	
			With balancing	14.2"			14.7"	
		Actuator		ØD = 6.7", A = 6 in²				
	65 to 150 psi	Height H	Without balancing	17.2"			19.1"	
			With balancing	18.3"			19.3"	
		Actuator		ØD = 6.7", A = 6 in²				

[1] For the regulator version with two-step control mode only

Installation

Normally, the valve is installed with the actuator on top. Install pipelines horizontally with a slight downward slope on both sides of the valve for drainage of the condensate.

Mounting position:



- Make sure the direction of flow matches the direction indicated by the arrow on the body.
- Adapt the control line to the conditions on site. The control line is not included in the scope of delivery. A control line kit is available on customer request for tapping the pressure directly at the valve body.
- In applications in which the blanketing gas can liquefy, condensate may form in the control line, causing damage to the regulator. To allow condensate to run back into the tank, install the control line with an approximate 10 % slope to the pressure tapping point at the tank.
- Observe the recommended inlet and outlet lengths of the regulator and for the pressure tapping point (control line).
- Install the regulator allowing sufficient space to remove it or to perform service work on it.
- Contact SAMSON if the installation conditions are different from those specified.
- Further information can be found in the Mounting and Operating Instructions ▶ EB 2520.

If the pressure p of the inert gas in the tank falls below the set point p_2 adjusted at the **Type 2405** Pressure Reducing Valve (1), it opens to allow more gas to enter the tank. The regulator (1) closes when the pressure p of the blanketing gas rises to the adjusted set point p_2. If the pressure is too high, the gas is vented off over the **Type 2406** Excess Pressure Valve (2).

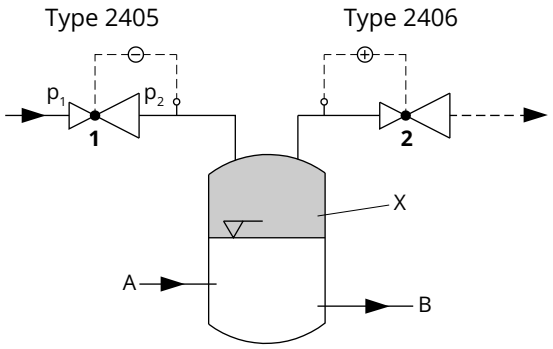

Fig. 6: *Sample application, Type 2405 used for tank blanketing*

1 Type 2405 Pressure Reducing Valve
2 Type 2406 Excess Pressure Valve
A Inlet for product medium
B Outlet for product medium
X Inert gas for blanketing

Ordering text

Type 2405 Pressure Reducing Valve

Nominal size NPS ...

Set point range ... psi

Body material ...

Pressure rating Class ...

C_V coefficient ...

Optionally, special version ...

Materials:
Plug seal ...,
balancing diaphragm ...,
operating diaphragm ...