DATA SHEET

T 3963 EN

Type 3963 Solenoid Valve

CE Ex certified

Application

Control pneumatic actuators in hazardous areas

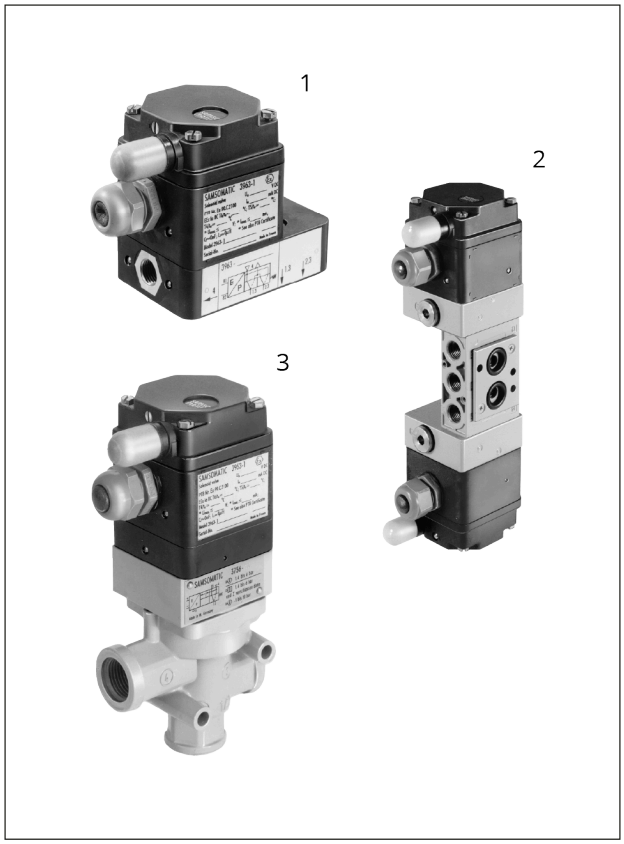

1 5/2-way solenoid valve, single solenoid, with spring return mechanism, K_{VS} 0.16, G ¼ connection

2 5/2-way solenoid valve, double solenoid, with two detent positions, K_{VS} 1.4, G ¼ connection, NAMUR

3 3/2-way solenoid valve, single solenoid, with spring return mechanism, K_{VS} 4.3, G ½ connection

General features

- SIL according to IEC 61508 (optional)
- Safety function for use on control valves (optional)
- Corrosion-resistant enclosure with degree of protection IP54 or IP65 for use in humid or rough ambient conditions
- Version compatible with paint (on request)
- Service life of over 20 million switching cycles
- Ambient temperature range -20 to +80 °C or -45 to +80 °C
- Rail, wall or pipe mounting
- Mounting on linear actuators with NAMUR rib according to IEC 60534-6 (NAMUR) or on rotary actuators with NAMUR interface according to VDI/VDE 3845

Pilot valve features

- Electropneumatic binary converter with flapper/nozzle assembly
- Nominal signal 6/12/24 V DC or 115/230 V AC
- Types of protection according to "Ex approvals" table on page 15
- 6 to 27 mW or 0.04 to 0.46 VA power consumption (depending on nominal signal)
- Manual override using pushbutton or switch (optional)
- Supply 1.4 to 6 bar
- Cable entry with M20x1.5 cable gland
- Electrical connection with terminals or connector
- Cable break protection (accessories)

Booster valve features

- Diaphragm actuator with return spring or spool actuated either on one side or both sides
- 3/2-, 5/2-, 5/3 or 6/2-way function
- Exhaust air feedback (optional)
- K_{VS} 0.16 to 4.3
- Supply/exhaust air restrictors to adjust different closing and opening times in a ratio of 1:15 (optional), see ▶ AB 11
- G ¼ or G ½/¼ NPT or ½ NPT threaded connections
- NAMUR interface ¼" or ½"

SAMSON AKTIENGESELLSCHAFT
Weismüllerstraße 3 · 60314 Frankfurt am Main, Germany
Phone: +49 69 4009-0 · samson@samsongroup.com · www.samsongroup.com

Edition July 2026

Mounting on versions

Solenoid valves for mounting on actuators for throttling or on/off service









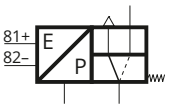

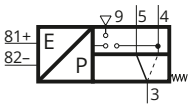

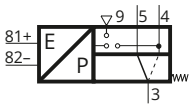

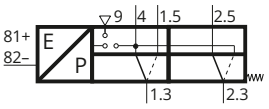

Type 3963-XXX003240XXXXX
- 3/2-way function
- K_{VS} 0.32
- Safety function (SIL/TÜV)
- Mounting with connection block on Type 3277 Linear Actuator with Types 3730, 3766, 3767 and 378X Positioners

Type 3963-XXX0022XXXXXXX
- 3/2-way function
- K_{VS} 0.32
- G ¼ or ¼ NPT connection
- Safety function (SIL/TÜV)
- Mounting on linear actuators (e.g. Type 3271) with NAMUR rib

Type 3963-XXX0012XXXXXXX
- 3/2-way function
- K_{VS} 0.32
- G ¼ or ¼ NPT connection
- Safety function (SIL/TÜV)
- Rail mounting, wall mounting or mounting on linear actuators (e.g. Type 3271 or Type 3277) using pipe fitting

Type 3963-XXX1011XXXXXX0
- 5/2-way function
- K_{VS} 0.16
- G ¼ or ¼ NPT connection
- Rail or wall mounting

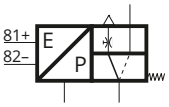

Type 3963-XXX013141XXXX0
- 3/2-way function
- Adjustable exhaust air restrictor
- K_{VS} 0.16
- Mounting with connection block on Type 3277 Linear Actuator with Types 3730, 3766, 3767 and 378X Positioners

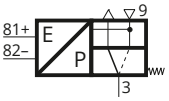

Type 3963-XXX0011X0XXXXX
- 3/2-way function
- K_{VS} 0.16
- G ¼ or ¼ NPT connection
- Rail mounting, wall mounting or mounting on linear actuators (e.g. Type 3271 or Type 3277) using pipe fitting for on/off service

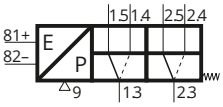

Type 3963-XXX8011XXXXXX0
- 6/2-way function
- K_{VS} 0.16
- G ¼ or ¼ NPT connection
- Rail or wall mounting

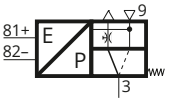

Type 3963-XXX0111X0XXXX0
- 3/2-way function
- Adjustable exhaust air restrictor
- K_{VS} 0.16
- G ¼ or ¼ NPT connection
- Rail mounting, wall mounting or mounting on linear actuators (e.g. Type 3271 or Type 3277) using pipe fitting for on/off service

			
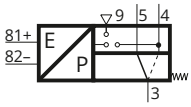	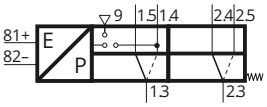	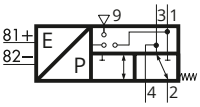	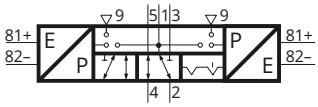
Type 3963-XXX0014XXXXXXX – 3/2-way function – K_{VS} 4.3 – G ½ or ½ NPT connection – Safety function (SIL/TÜV) – Wall mounting or mounting on linear actuators (e.g. Type 3271 or Type 3277)	**Type 3963-XXX1014XXXXXX0** – 5/2-way function – K_{VS} 4.3 – G ½ or ½ NPT connection – Wall or pipe mounting	**Type 3963-XXX0013XXXXXXX** – 3/2-way function – Exhaust air feedback – K_{VS} 1.4 – G ¼ or ¼ NPT connection – Safety function (TÜV) – Wall mounting or mounting on linear actuators (e.g. Type 3271 or Type 3277)	**Type 3963-XXX2013XXXXXXX** – 5/2-way function with two detent positions – K_{VS} 1.4 – G ¼ or ¼ NPT connection – Safety function (TÜV) – Wall or pipe mounting
	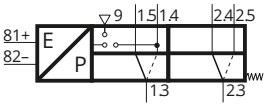	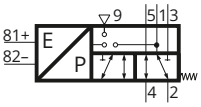	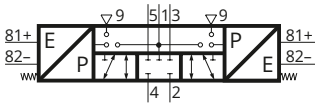
	Type 3963-XXX8014XXXXXX0 – 6/2-way function – K_{VS} 4.3 – G ½ or ½ NPT connection – Wall or pipe mounting	**Type 3963-XXX1013XXXXXX0** – 5/2-way function – K_{VS} 1.4 – G ¼ or ¼ NPT connection – Wall mounting or mounting on linear actuators (e.g. Type 3271 or Type 3277)	**Type 3963-XXX3013XXXXXX0** – 5/3-way function with spring-centered mid-position (ports 2 and 4 closed) – K_{VS} 1.4 – G ¼ or ¼ NPT connection – Wall or pipe mounting
			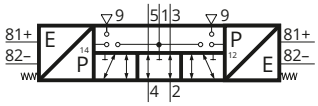
			Type 3963-XXX5013XXXXXX0X – 5/3-way function with spring-centered mid-position (ports 2 and 4 vented) – K_{VS} 1.4 – G ¼ or ¼ NPT connection – Safety function (TÜV) – Wall or pipe mounting

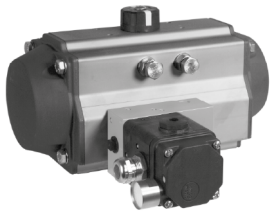







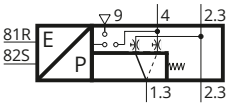

Type 3963-XXX0002XXXXXXX
- 3/2-way function
- Exhaust air feedback
- K_{VS} 0.32
- G ¼ or ¼ NPT connection, NAMUR
- Safety function (SIL/TÜV)
- Mounting on rotary actuators with NAMUR interface (optionally with positioner)

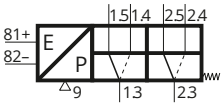

Type 3963-XXX8001XXXXXX0
- 6/2-way function
- K_{VS} 0.16
- G ¼ or ¼ NPT connection, NAMUR
- Mounting on rotary actuators with NAMUR interface

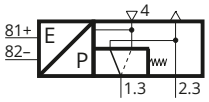

Type 3963-XXX0001X0XXXXX
- 3/2-way function
- Exhaust air feedback
- K_{VS} 0.16
- G ¼ or ¼ NPT connection, NAMUR
- Safety function (SIL/TÜV)
- Mounting on rotary actuators for on/off service with NAMUR interface or with adapter plate on linear actuators (e.g. Type 3241-1) with NAMUR rib

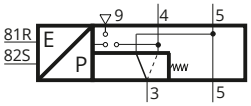

Type 3963-XXX0007XXXXXXX
- 3/2-way function
- Exhaust air feedback
- K_{VS} 2.0
- G ¼ or G ½/¼ NPT or ½ NPT connection, NAMUR ¼"
- Safety function (SIL/TÜV)
- Mounting on rotary actuators for on/off service with NAMUR interface ⅛"/¼" or with adapter plate on linear actuators (e.g. Type 3241-1) with NAMUR rib

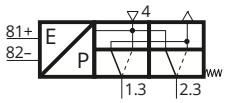

Type 3963-XXX1001XXXXXX0
- 5/2-way function
- K_{VS} 0.16
- G ¼ or ¼ NPT connection, NAMUR
- Mounting on rotary actuators for on/off service with NAMUR interface

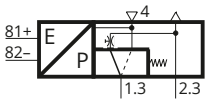

Type 3963-XXX0101X0XXXX0
- 3/2-way function
- Exhaust air feedback
- Adjustable exhaust air restrictor
- K_{VS} 0.16
- G ¼ or ¼ NPT connection, NAMUR
- Mounting on rotary actuators for on/off service with NAMUR interface or with adapter plate on linear actuators (e.g. Type 3241-1) with NAMUR rib

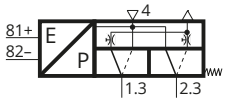

Type 3963-XXX1201X0XXXX0
- 5/2-way function
- Two adjustable exhaust air restrictors
- K_{VS} 0.16
- G ¼ or ¼ NPT connection, NAMUR
- Mounting on on/off rotary actuators for on/off service with NAMUR interface

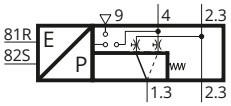

Type 3963-XXX0301XXXXXX0
- 3/2-way function
- Adjustable supply air/exhaust air restrictors
- K_{VS} 0.16
- G ¼ or ¼ NPT connection, NAMUR
- Mounting on rotary actuators with NAMUR interface or with adapter plate on linear actuators (e.g. Type 3241-1) with NAMUR rib



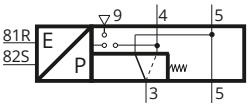

Type 3963-XXX0004XXXXXXX
- 3/2-way function
- Exhaust air feedback
- K_{VS} 4.3
- G ½, ½ NPT or NAMUR ½" connection
- Safety function (SIL/TÜV)
- Mounting on on/off rotary actuators for on/off service with NAMUR interface ⅜“ or ½”



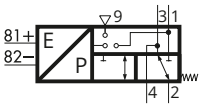

Type 3963-XXX0003XXXXXXX
- 3/2-way function
- Exhaust air feedback
- K_{VS} 1.4
- G ¼ or ¼ NPT connection, NAMUR
- Safety function (TÜV)
- Mounting on rotary actuators with NAMUR interface or with adapter plate on linear actuators with NAMUR rib



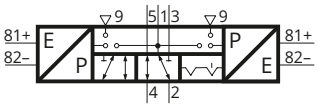

Type 3963-XXX2003XXXXXXX
- 5/2-way function with two detent positions
- K_{VS} 1.4
- G ¼ or ¼ NPT connection, NAMUR
- Safety function (TÜV)
- Mounting on rotary actuators with NAMUR interface



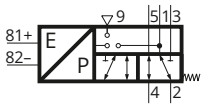

Type 3963-XXX1006XXXXXX0
- 5/2-way function
- K_{VS} 2.9
- G ½, ½ NPT or NAMUR ½" connection
- Mounting on rotary actuators with NAMUR interface ⅜“ or ½”

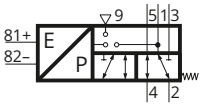

Type 3963-XXX1003XXXXXX0
- 5/2-way function
- K_{VS} 1.4
- G ¼ or ¼ NPT connection, NAMUR
- Mounting on rotary actuators with NAMUR interface or with adapter plate on linear actuators with NAMUR rib

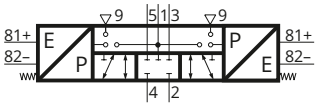

Type 3963-XXX3003XXXXXX0
- 5/3-way function with spring-centered mid-position (ports 2 and 4 closed)
- K_{VS} 1.4
- G ¼ or ¼ NPT connection, NAMUR
- Mounting on rotary actuators with NAMUR interface



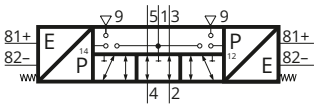

Type 3963-XXX5003XXXXXXX
- 5/3-way function with spring-centered mid-position (ports 2 and 4 vented)
- K_{VS} 1.4
- G ¼ or ¼ NPT connection, NAMUR
- Mounting on rotary actuators with NAMUR interface

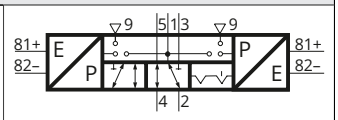

Type 3963-XXX2006XXXXXX0
- 5/2-way function with two detent positions
- K_{VS} 2.9
- G ½, ½ NPT or NAMUR ½" connection
- Mounting on rotary actuators with NAMUR interface ⅜“ or ½”

Design and principle of operation

⇨ See Fig. 1.

Solenoid valves with single solenoid

Solenoid valves with a single solenoid consist of an i/p binary converter with (optional) manual override and single-controlled booster valve with return spring.

The air supply for the i/p binary converter is routed internally through the booster valve (delivered state). The solenoid valve can be converted to accept an external pilot supply at port 9 by turning a gasket.

The pressure reducer reduces the pilot pressure to 1.4 bar.

In the idle position, the flapper is lifted off the outlet nozzle by the spring. As a result, a pressure lower than the deactivation pressure of the integrated booster valve builds up in the pressure divider, which consists of the restrictor and outlet nozzle. When the solenoid coil is energized by an electric binary signal, the outlet nozzle is closed by the flapper against the force of the spring. This causes the pressure in the pressure divider to rise above the activation pressure of the integrated booster valve and switches it to the operating position.

After the solenoid coil is de-energized, the integrated booster valve is switched to the idle position again by a return spring.

Solenoid valves with double solenoid

Solenoid valves with a double solenoid consist of two i/p binary converters with (optional) manual override and double-controlled booster valve with two detent positions or spring-centered mid-position.

The air supply for the i/p binary converters is routed internally through the booster valve (delivered state). The solenoid valve can be converted to accept an external pilot supply at port 9 by turning two gaskets.

The pressure reducer reduces the pilot pressure to 1.4 bar.

In the idle position, the flapper is lifted off the outlet nozzle by the spring. As a result, a pressure lower than the deactivation pressure of the integrated booster valve builds up in the pressure divider, which consists of the restrictor and outlet nozzle. When the solenoid coil is energized by an electric binary signal, the outlet nozzle is closed by the flapper against the force of the spring. This causes the pressure in the pressure divider to rise above the activation pressure of the integrated booster valve and switches it to the operating position.

After the solenoid coil is de-energized, the operating position of the detented booster valve is kept until the opposing signal is received. The spring-centered booster valve is switched to the mid-position by a return spring after the solenoid coil is de-energized.

A simultaneous control of the i/p binary converter must be ruled out on the electric control level.

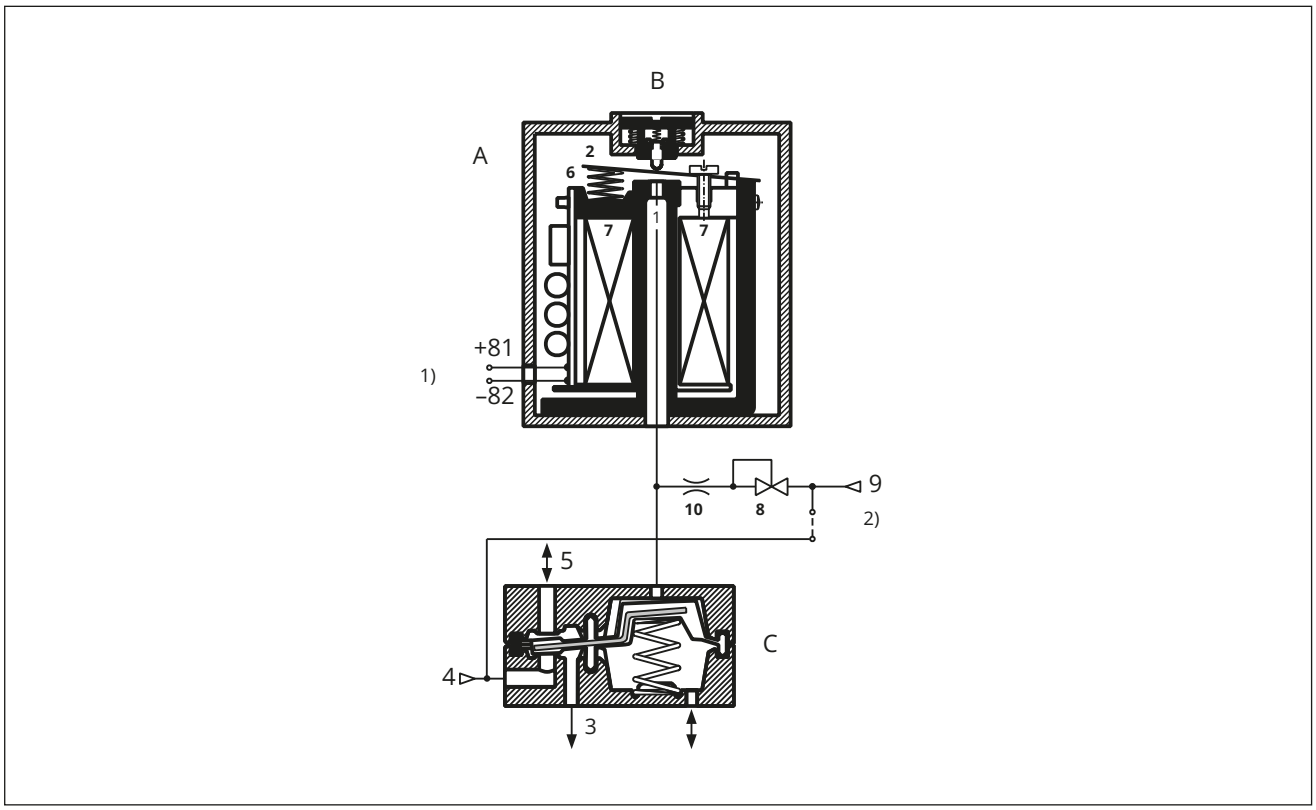

Fig. 1: *Function*

1) Nominal signal
2) Changeover to external pilot supply
A Binary i/p converter
B Manual override
C Booster valve
1 Outlet nozzle
2 Flapper plate
3 Port 3
4 Port 4
5 Port 5
6 Spring
7 Solenoid
8 Pressure reducer
9 Port 9
10 Restrictor

Technical data

Table 1: *Technical data · General*

Type 3963		
Design		Solenoid with flapper/nozzle assembly and booster valve
Degree of protection		IP54 with filter
		IP65 with filter check valve
Material	Enclosure	Polyamide PA 6-3-T-GF35, black
	Connecting plate	AlMg, powder coated, gray beige RAL 1019 or Ematal coating (depending on the version, see Article code on page 37)
		1.4404 (see Article code on page 37 for special versions)
		Polyamide PA 6-3-T-GF35, black
	Screws	1.4571
	Springs	1.4571
	Seals	Silicone rubber, Perbunan
	Diaphragms	Chloroprene rubber 57 Cr 868 (-20 to +80 °C)
		Silicone rubber (-45 to +80 °C)
Pilot supply	Medium	Instrument air free from corrosive substances or nitrogen
	Pressure	1.4 to 6 bar
Air consumption		≤80 l/h at 1.4 bar pilot supply in neutral position
		≤10 l/h at 1.4 bar pilot supply in operating position
Switching time		≤65 ms
Service life		≥2 x 10^7 switching cycles (at -20 to +80 °C)
		≥2 x 10^6 switching cycles (at -45 to +80 °C)
Mounting position		Any
Conformity		CE

Table 2: *Technical data · Electric*

Type 3963			**-X1**	**-X2**	**-X3**	**-06**	**-05**
Nominal signal		U_N	6 V DC, max. 27 V [1]	12 V DC, max. 25 V [1]	24 V DC, max. 32 V[1]	115 V AC, max. 130 V [1]	230 V AC, max. 255 V [1]
		f_n				48 to 62 Hz	
Switching point	ON	U_{+80}	≥4.8 V	≥9.6 V	≥18 V	82 to 130 V	183 to 255 V
		I_{+20}	≥1.41 mA	≥1.52 mA	≥1.57 mA	≥2.2 mA	≥2.6 mA
		P_{+20}	≥5.47 mW	≥13.5 mW	≥26.71 mW	≥0.17 VA	≥0.46 VA
	OFF	U_{-25}	≤1.0 V	≤2.4 V	≤4.7 V	≤18 V	≤36 V
Impedance		R_{+20}	2.6 KΩ	5.5 KΩ	10.7 KΩ	40 KΩ	80 KΩ
Effect of temperature			0.4 %/°C	0.2 %/°C	0.1 %/°C	0.05 %/°C	0.03 %/°C
Type of protection Ex ia IIC[2] for use in hazardous areas (Zone 1)							
Type 3963			-11	-12	-13		
Maximum values when connected to a certified intrinsically safe circuit							
Output voltage[4]		U_i	25 V · 27 V · 28 V · 30 V · 32 V				
Output current[4]		I_i	150 mA · 125 mA · 115 mA · 100 mA · 85 mA				
Power dissipation		P_i	250 mW	No restrictions			
Outer capacitance		C_i	Approx. 0				
Outer inductance		L_i	Approx. 0				
Ambient temperature in temperature class		T6	-45 to +60 °C				
		T5	-45 to +70 °C				
		T4	-45 to +80 °C				
Type of protection Ex nA II[3] for use in hazardous areas (Zone 2)							
Type 3963			-81	-82	-83		
Ambient temperature in temperature class		T6	-45 to +60 °C				
		T5	-45 to +70 °C				
		T4	-45 to +80 °C				

[1] Maximum permissible value at 100 % duty cycle.
The maximum permissible value U_i applies to explosion-protected versions.

[2] Type of protection II 2G Ex ia IIC T6 according to EC type examination certificate PTB 01 ATEX 2085

[3] Type of protection II 3G Ex nA II T6 according to Statement of Conformity PTB 01 ATEX 2086 X

[4] Pairs of values U_i/I_i apply to 6, 12, 24 V DC nominal signals.

Table 3: *Technical data · Pneumatic · Solenoid valves with single solenoid, K_{VS} 0.16 or 0.32*

Type 3963				
Switching function	3/2-way function	3/2-way function	5/2-way function	6/2-way function
K_{VS} coefficient[1)]	0.16	0.32	0.16	0.16
Safety function	SIL[3)], TÜV[4)]	SIL[3)], TÜV[4)]	SIL[3)], TÜV[4)]	-
Design	Diaphragm switching element, soft seated, with return spring			
Operating medium	Instrument air (free from corrosive substances)[5)], air containing oil or non-corrosive gases[6)]			
Operating pressure	1.4 to 6 bar			
Output signal	Operating pressure			
Permissible ambient temperature range[2)]	-45 to +80 °C			
Connection	G ¼ or ¼ NPT			
Approx. weight	0.57 kg (standard version)			

1) The air flow rate when p_1 = 2.4 bar and p_2 = 1.0 bar can be calculated using the following formula: $Q = K_{VS} \times 36.22$ in m^3/h.

2) The permissible ambient temperature of the solenoid valve depends on the permissible ambient temperature of the components, type of protection and temperature class.

3) SIL according to IEC 61508

4) Emergency release or locking of compressed air supply

5) With internal pilot supply

6) With external pilot supply

Table 4: *Technical data · Pneumatic · Solenoid valves with threaded connections, with single solenoid, K_{VS} 4.3*

Type 3963					
Switching function		3/2-way function	3/2-way function	5/2-way function[7]	6/2-way function[7]
K_{VS}[1] (direction of flow)		1.9 (4→3), 1.5 (3→4) 4.3 (3→5), 4.7 (5→3)			
Permissible ambient temperature range[2]		-20 to +80 °C	-45 to +80 °C	-20 to +80 °C	-20 to +80 °C
Safety approval		SIL[3], TÜV[4]	SIL[3], TÜV[4]	–	–
Design		Poppet valve with diaphragm actuator, soft seated, with return spring			
Material	Enclosure	Aluminum, powder coated, gray beige RAL 1019, 1.4404 (see Article code on page 37 for special versions)			
	Diaphragm	Chloroprene rubber	Silicone rubber	Chloroprene rubber	Chloroprene rubber
	Seals	Chloroprene rubber	Silicone rubber	Chloroprene rubber	Chloroprene rubber
	Screws	Stainless steel 1.4571			
Actuation		Single solenoid with a pilot valve, K_{VS} 0.16			
Operating medium		Instrument air free from corrosive substances or nitrogen[5] Instrument air (free from corrosive substances), air containing oil or non-corrosive gases[6]			
Max. operating pressure (direction of flow)		1.4 to 6 bar[5] or 10 bar[6] (4→3, 3→5) 2 bar (as required)	1.4 to 6 bar[5] or 10 bar[6] (4→3, 3→5) 2 bar (as required)	1.4 to 6 bar[5] or 10 bar[6] (as required) 2 bar (as required)	1.4 to 6 bar[5] or 10 bar[6] (as required) 2 bar (as required)
Switching cycles (operating pressure)		≥10^7 (6 bar) ≥10^6 (10 bar)	≥10^6 (6 bar) ≥10^5 (10 bar)	≥10^7 (6 bar) ≥10^6 (10 bar)	≥10^7 (6 bar) ≥10^6 (10 bar)
Connection		G ½ or ½ NPT			
Approx. weight		0.585 kg (standard version)		1.1 kg (standard version)	

1) The air flow rate when p_1 = 2.4 bar and p_2 = 1.0 bar can be calculated using the following formula: $Q = K_{VS}$ x 36.22 in m³/h.

2) The permissible ambient temperature of the solenoid valve depends on the permissible ambient temperature of the components, type of protection and temperature class.

3) SIL according to IEC 61508

4) Emergency release or locking of compressed air supply

5) With internal pilot supply

6) With external pilot supply

7) Connecting hose between booster valves made of polyamide, see Fig. 9 and Fig. 10

Table 5: *Technical data · Pneumatic · Solenoid valves with NAMUR interface, with single solenoid, K_{VS} 2.0 or 4.3*

Type 3963					
Switching function		3/2-way function			
K_{VS} [1] (direction of flow)		1.1 (4→3), 2.0 (3→5)		1.9 (4→3), 4.3 (3→5)	
Ambient temperature range[2]		-20 to +80 °C	-45 to +80 °C	-20 to +80 °C	-20 to +80 °C
Safety function		SIL[3], TÜV[4]	SIL[3], TÜV[4]	SIL[3], TÜV[4]	SIL[3], TÜV[4]
Design		Poppet valve with diaphragm actuator, soft seated, with return spring			
Material	Enclosure	Aluminum, powder coated, gray beige RAL 1019 or Ematal coating (depending on the version) Stainless steel 1.4404 (special versions) See Article code on page 37.			
	Diaphragm	Chloroprene rubber	Silicone rubber	Chloroprene rubber	Silicone rubber
	Seals	Chloroprene rubber	Silicone rubber	Chloroprene rubber	Silicone rubber
	Screws	Stainless steel 1.4571			
Actuation		Single solenoid with a pilot valve, K_{VS} 0.16			
Operating medium		Instrument air free from corrosive substances or nitrogen[5] Instrument air (free from corrosive substances), air containing oil or non-corrosive gases[6]			
Max. operating pressure		2.7 to 6 bar[5] or 10 bar[6]			
Switching cycles (operating pressure)		≥10^7 (6 bar) ≥10^6 (10 bar)	≥10^6 (6 bar) ≥10^5 (10 bar)	≥10^7 (6 bar) ≥10^6 (10 bar)	≥10^7 (6 bar) ≥10^5 (10 bar)
Connection	Supply air	G ¼ or ¼ NPT, NAMUR interface ¼"[7], G ⅜		G ½ or ½ NPT, NAMUR interface ½"[7]⅜	
	Exhaust air	G ½ or ½ NPT, NAMUR interface ½"[7], G ⅜		G ½ or ½ NPT, NAMUR interface ½"[7]⅜	
Approx. weight		1.38 kg (standard version)		1.5 kg (standard version)	

1) The air flow rate when p_1 = 2.4 bar and p_2 = 1.0 bar can be calculated using the following formula:
$Q = K_{VS}$ x 36.22 in m³/h.

2) The permissible ambient temperature of the solenoid valve depends on the permissible ambient temperature of the components, type of protection and temperature class.

3) SIL according to IEC 61508

4) Emergency release or locking of compressed air supply

5) With internal pilot supply

6) With external pilot supply

7) NAMUR interface according to VDI/VDE 3845

Table 6: *Technical data · Pneumatic · Solenoid valves with single solenoid, K_{VS} 1.4 or 2.9*

Type 3963			
Switching function		3/2-way function with exhaust air feedback	5/2-way function
K_{VS} coefficient[1]		1.4 or 2.9	
Safety function		TÜV[2] (with K_{VS} 1.4)	
Design		Spool, metal-to-metal seat, zero overlap, with return spring	
Material	Enclosure	Aluminum, powder coated, gray beige RAL 1019 1.4404 (see Article code on page 37 for special versions)	
	Seals	Silicone	
	Filter	Polyethylene	
	Screws	Stainless steel 1.4571	
Actuation		Single solenoid with a pilot valve, K_{VS} 0.01 (with 1.4) or K_{VS} 0.16 (with 2.9)	
Operating medium		Instrument air free from corrosive substances or nitrogen[3] Instrument air (free from corrosive substances), air containing oil or non-corrosive gases[4]	
Max. operating pressure		6 bar[3] or 10 bar[4]	
Ambient temperature range[5]		-45 to +80 °C	
Switching cycles		≥2 x 10^7	
Connection	K_{VS} 1.4	G ¼ or ¼ NPT, NAMUR interface[6]	
	K_{VS} 2.9	G ½ or ½ NPT, NAMUR interface[6]	
Approx. weight	K_{VS} 1.4	0.485 kg (standard version)	
	K_{VS} 2.9	1.76 kg (standard version)	

1) The air flow rate when p_1 = 2.4 bar and p_2 = 1.0 bar can be calculated using the following formula: $Q = K_{VS}$ x 36.22 in m^3/h.

2) Emergency release or locking of compressed air supply

3) With internal pilot supply

4) With external pilot supply

5) The permissible ambient temperature of the solenoid valve depends on the permissible ambient temperature of the components, type of protection and temperature class.

6) NAMUR interface according to VDI/VDE 3845

Table 7: *Technical data · Pneumatic · Solenoid valves with double solenoid, K_{VS} 1.4 or 2.9*

Type 3963				
Switching function		5/2-way function with two detent positions	5/3-way function with spring-centered mid-position (ports 2 and 4 closed)	5/3-way function with spring-centered mid-position (ports 2 and 4 vented)
K_{VS} coefficient[1)]		1.4 or 2.9	1.4 (2.9 on request)	1.4 (2.9 on request)
Safety function		TÜV[2)] (with K_{VS} 1.4)	–	TÜV[2)] (with K_{VS} 1.4)
Design		Spool, metal-to-metal seat, zero overlap		
Material	Enclosure	Aluminum, powder coated, gray beige RAL 1019 1.4404 (see Article code on page 37 for special versions)		
	Seals	Silicone		
	Filter	Polyethylene		
	Screws	Stainless steel 1.4571		
Actuation		Double solenoid with two pilot valves, K_{VS} 0.01 (with 1.4) or K_{VS} 0.16 (with 2.9)		
Operating medium		Instrument air (free from corrosive substances) or nitrogen [3)], Instrument air (free from corrosive substances), air containing oil or non-corrosive gases[4)]		
Max. operating pressure		6 bar[3)] or 10 bar[4)]		
Ambient temperature range[5)]		-45 to +80 °C		
Switching cycles		≥2 x 10^7		
Connection	K_{VS} 1.4	G ¼ or ¼ NPT, NAMUR interface[6)]		
	K_{VS} 2.9	G ½ or ½ NPT, NAMUR interface[6)]		
Approx. weight	K_{VS} 1.4	0.685 kg (standard version)		
	K_{VS} 2.9	2.18 kg (standard version)		

1) The air flow rate when p_1 = 2.4 bar and p_2 = 1.0 bar can be calculated using the following formula:
$Q = K_{VS}$ x 36.22 in m^3/h.

2) Emergency release or locking of compressed air supply

3) With internal pilot supply

4) With external pilot supply

5) The permissible ambient temperature of the solenoid valve depends on the permissible ambient temperature of the components, type of protection and temperature class.

6) NAMUR interface according to VDI/VDE 3845

Ex approvals

Type	Certificate			Type of protection/comments
3963-1	**NEPSI**	Number Date Valid until	GYJ23.1086X 2023-04-29 2028-04-28	Ex ia IIC T4...T6 Gb
	CCC Ex	Number Date Valid until	2021322307003631 2026-01-03 2031-01-02	Ex ia IIC T4...T6 Gb
	ATEX	Number Date	PTB 01 ATEX 2085 2019-11-18	II 2 G Ex ia IIC T6...T4 Gb
3963-3	**FM**	Number Date	FM24US0232 2025-01-02	IS Class I, II, III, Div. 1,GP A, B, C, D, E, F, G, T* Type 4X IS Class I, Zn 0, AEx ia IIC, T* T* = Temperature Class and Ambient Temperature Range per Dwg. Addendum to EB 3963 EN
3963-8	**ATEX**	Number Date	PTB 01 ATEX 2086 X 2014-04-17	II 3G Ex nA II T6 Gc II 3G Ex ic IIC T6 Gc

1) EC type examination certificate

2) Statement of conformity

Dimensions

Solenoid valves without threaded connections

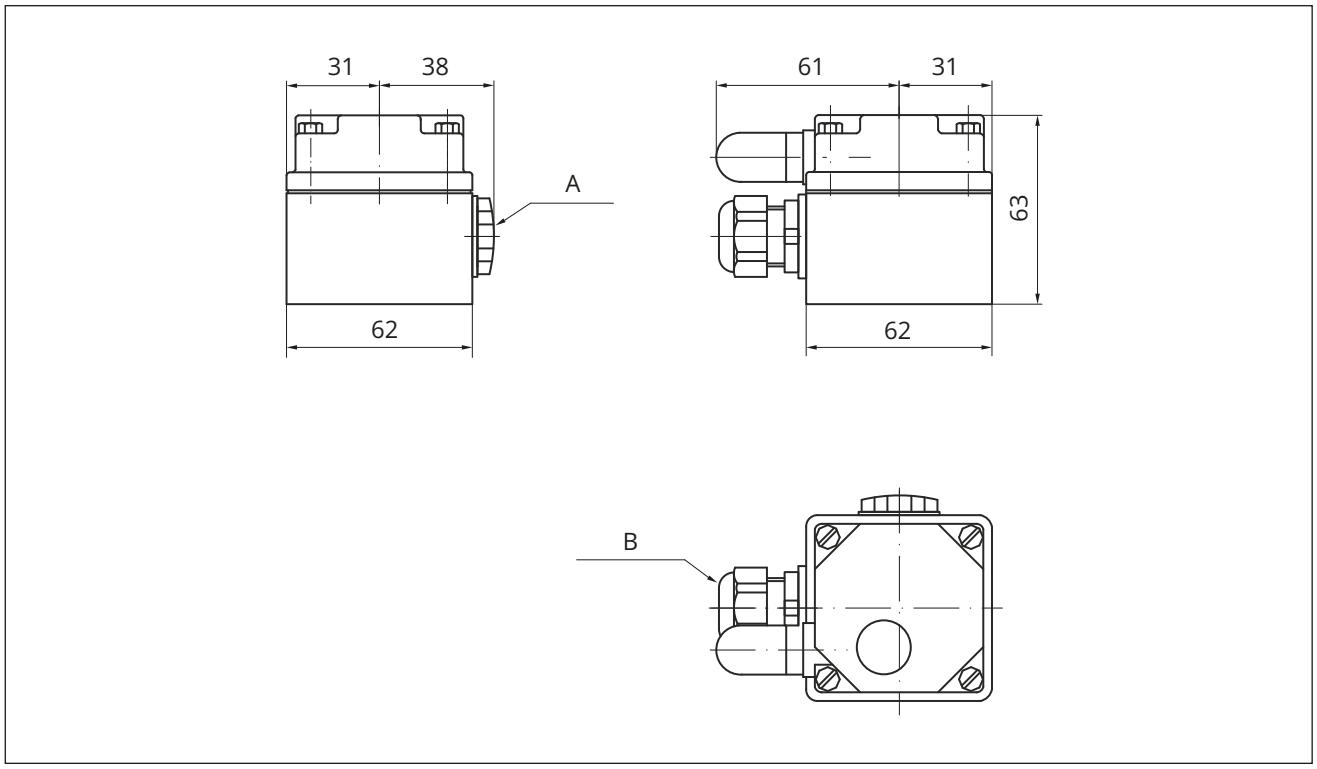

Fig. 2: *Dimensions in mm · Type 3963-xxx0x4541: Pilot valve, K_{VS} 0.01*

A M20x1.5 screw plug
B M20x1.5 cable gland

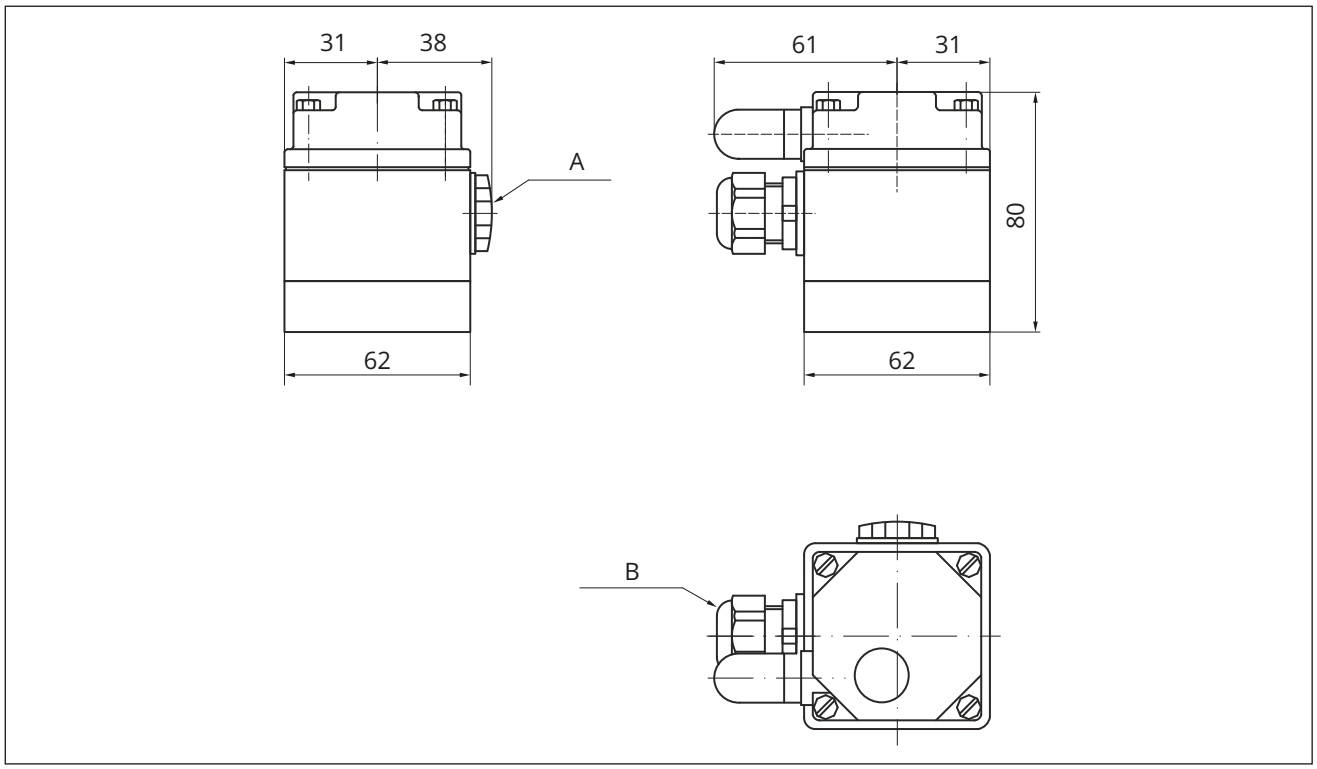

Fig. 3: *Dimensions in mm · Type 3963-xxx0x414: Pilot valve, K_{VS} 0.16*

A M20x1.5 screw plug
B M20x1.5 cable gland

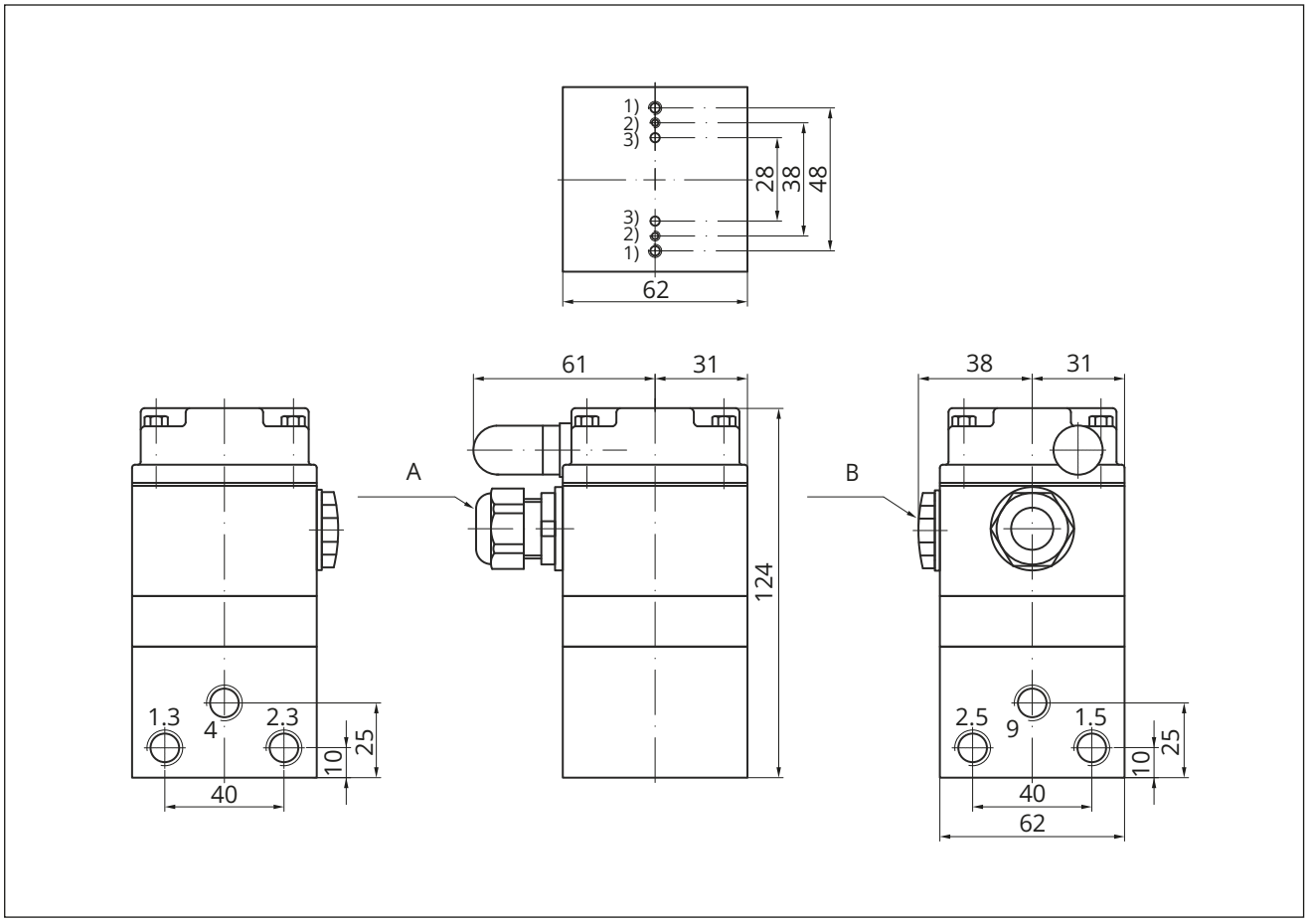

Fig. 4: *Dimensions in mm · Type 3963-xxx1x11: 5/2-way solenoid valve, single controlled, K_{VS} 0.16*

A M20x1.5 cable gland

B M20x1.5 screw plug

Bottom view of connecting plate

[1] M4/7 mm deep

[2] M3/6 mm deep

[3] Ø 3 mm/3.5 mm deep

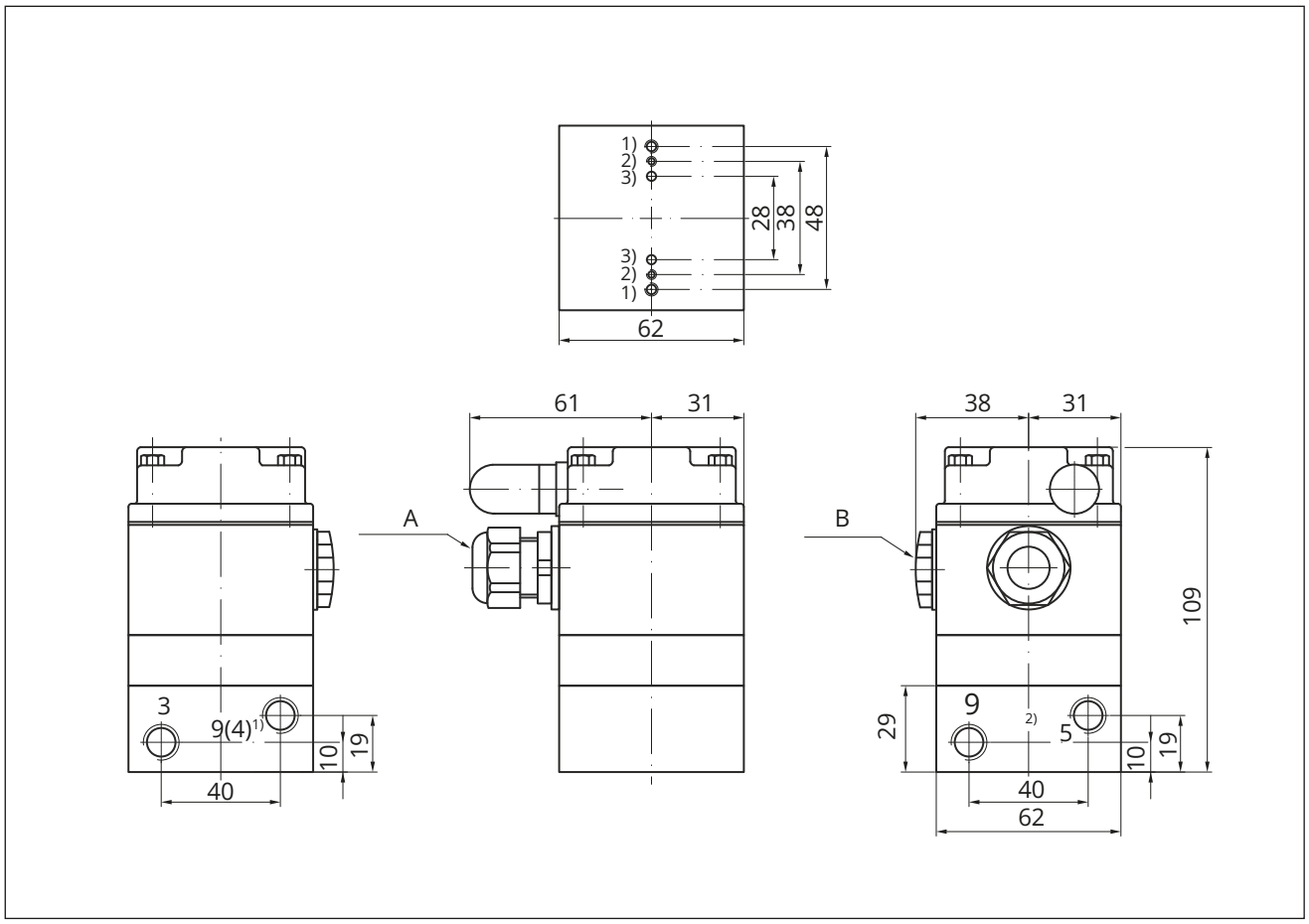

Fig. 5: *Dimensions in mm · Types 3963-xxx0x11/-xxx0x12: 3/2-way solenoid valve, single controlled, K_{VS} 0.16 or 3.2*

A M20x1.5 cable gland

B M20x1.5 screw plug

4) Port 9 in Type 3963-xxx0x11x0xxxx
Port 4 in Type 3963-xxx0x12xxxxxx

5) Ports 9 and 5 in Type 3963-xxx0x12xxxxxx

Bottom view of connecting plate

1) M4/7 mm deep

2) M3/6 mm deep

3) Ø 3 mm/3.5 mm deep

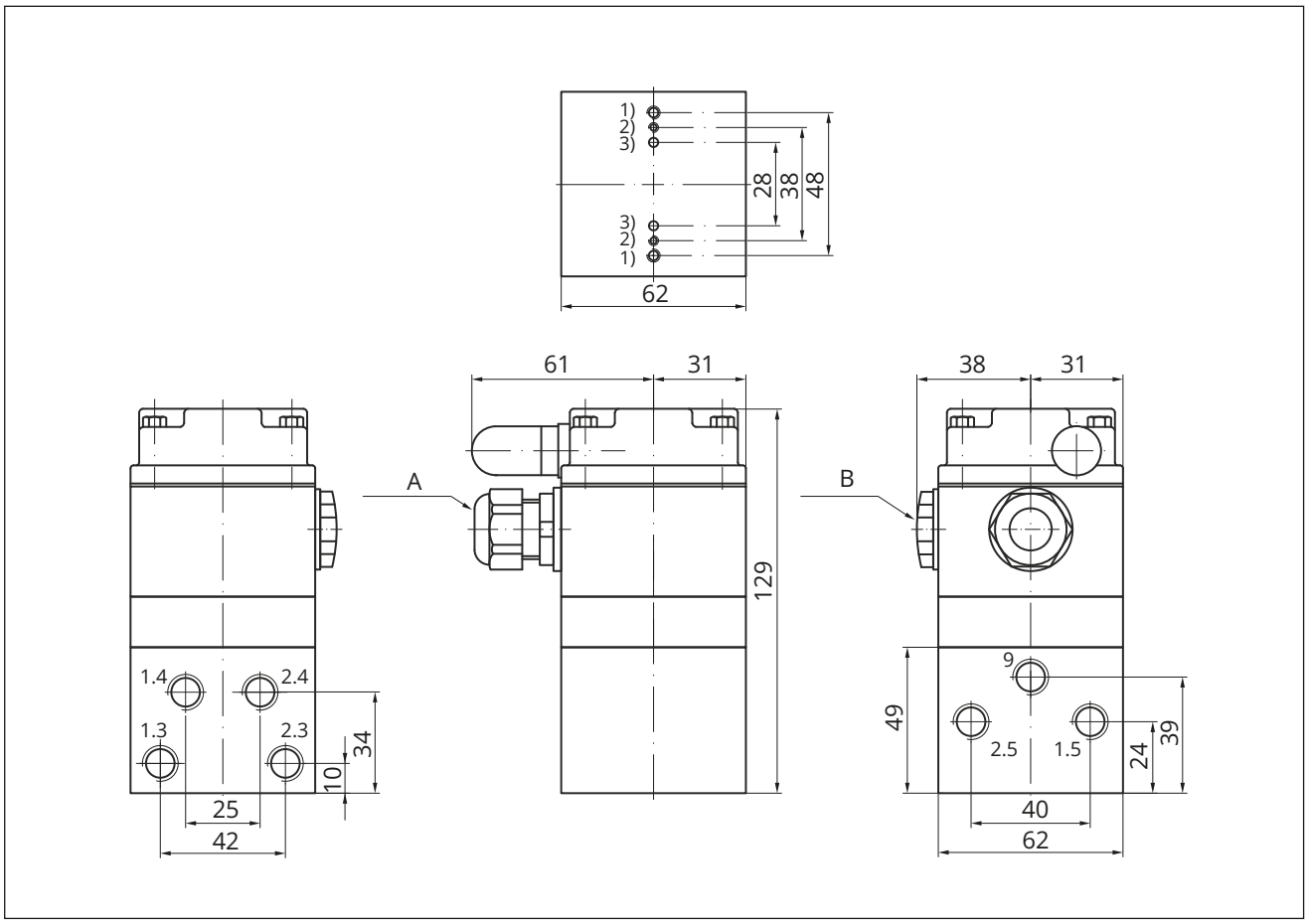

Fig. 6: *Dimensions in mm · Type 3963-xxx8x11: 6/2-way solenoid valve, single controlled, K_{VS} 0.16*

A M20x1.5 cable gland

B M20x1.5 screw plug

Bottom view of connecting plate

[1] M4/7 mm deep

[2] M3/6 mm deep

[3] Ø 3 mm/3.5 mm deep

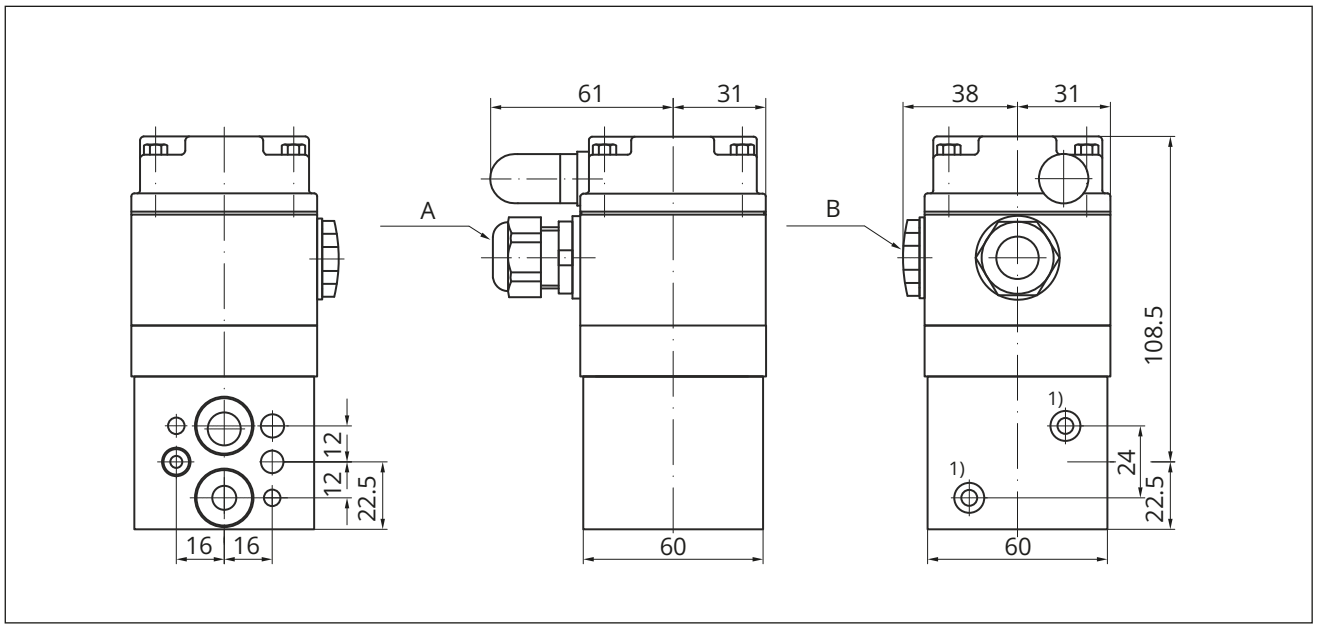

Fig. 7: *Dimensions in mm · Types 3963-xxx0x314/-xxx0x324: 3/2-way solenoid valve, single controlled, K_{VS} 0.16 or 0.32, for mounting to linear actuators using a mounting block*

A M20x1.5 cable gland

B M20x1.5 screw plug

1) * Mounting to a mounting block using two M5x60 (DIN 912) screws

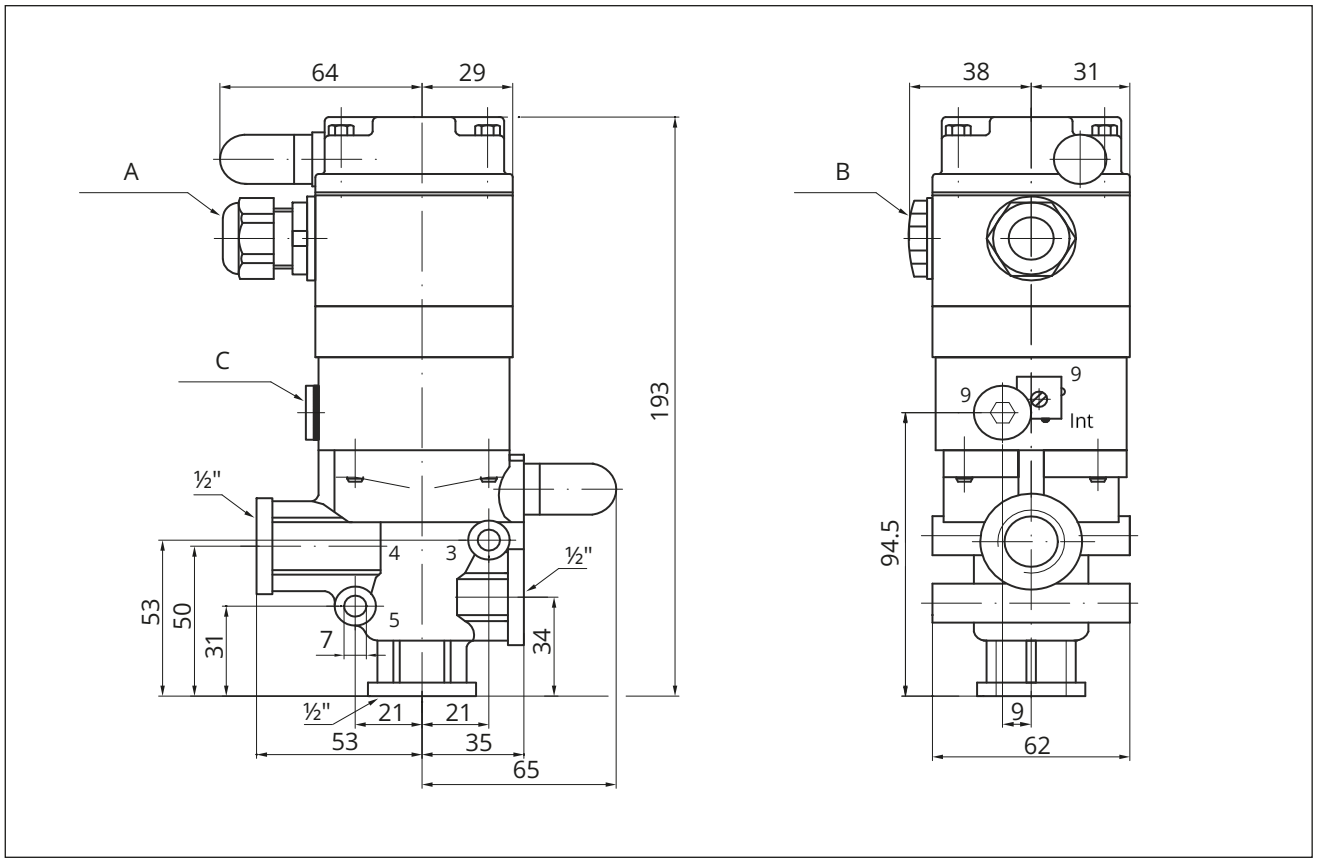

Fig. 8: *Dimensions in mm · Type 3963-xxx0x14: 3/2-way solenoid valve, single controlled, K_{VS} 4.3*

A M20x1.5 cable gland

B M20x1.5 screw plug

C G ¼ blanking plug

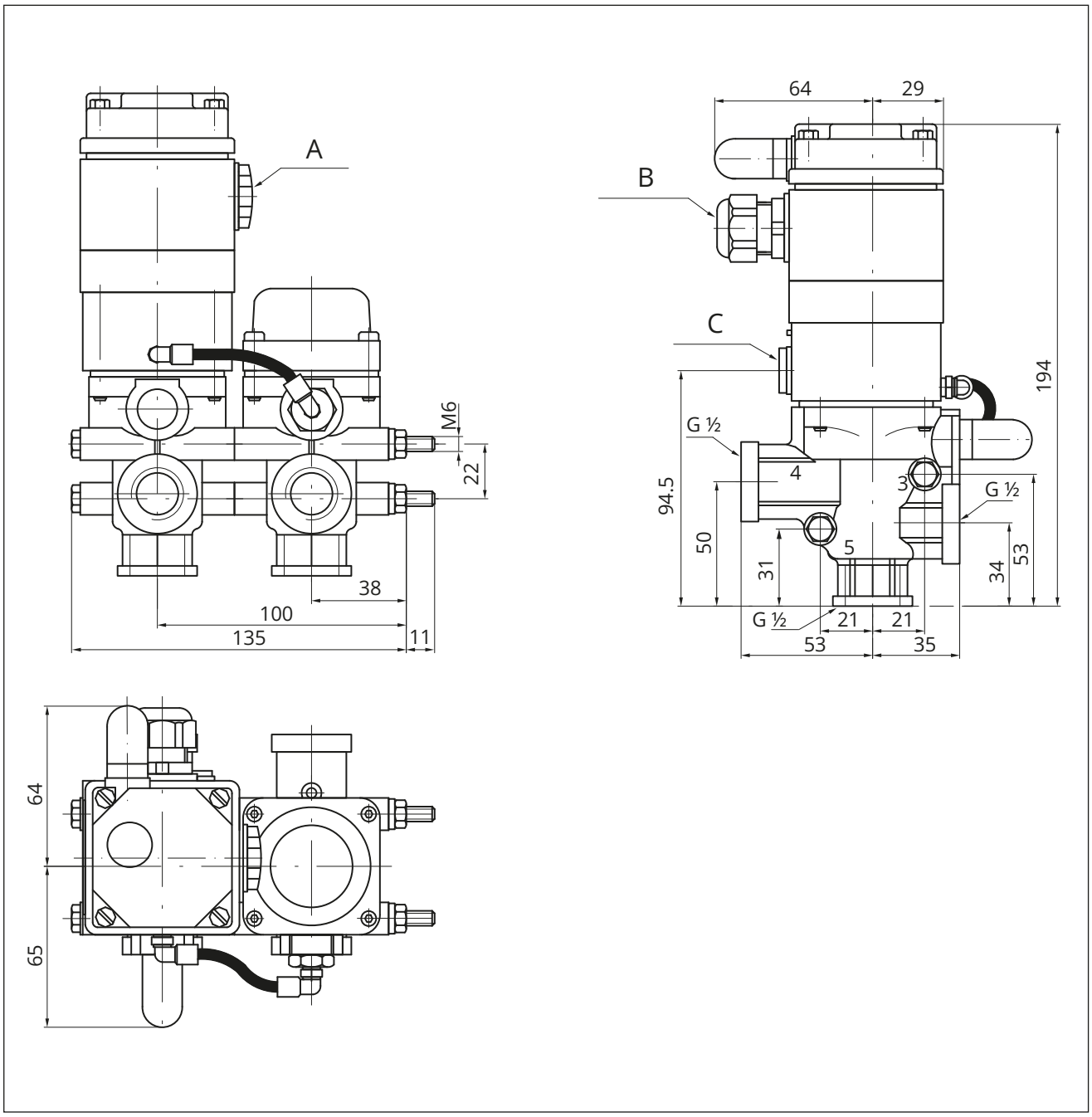

Fig. 9: *Dimensions in mm · Type 3963-xxx1x14: 5/2-way solenoid valve, single controlled, K_{VS} 4.3*

A M20x1.5 screw plug
B M20x1.5 cable gland
C G ¼ blanking plug

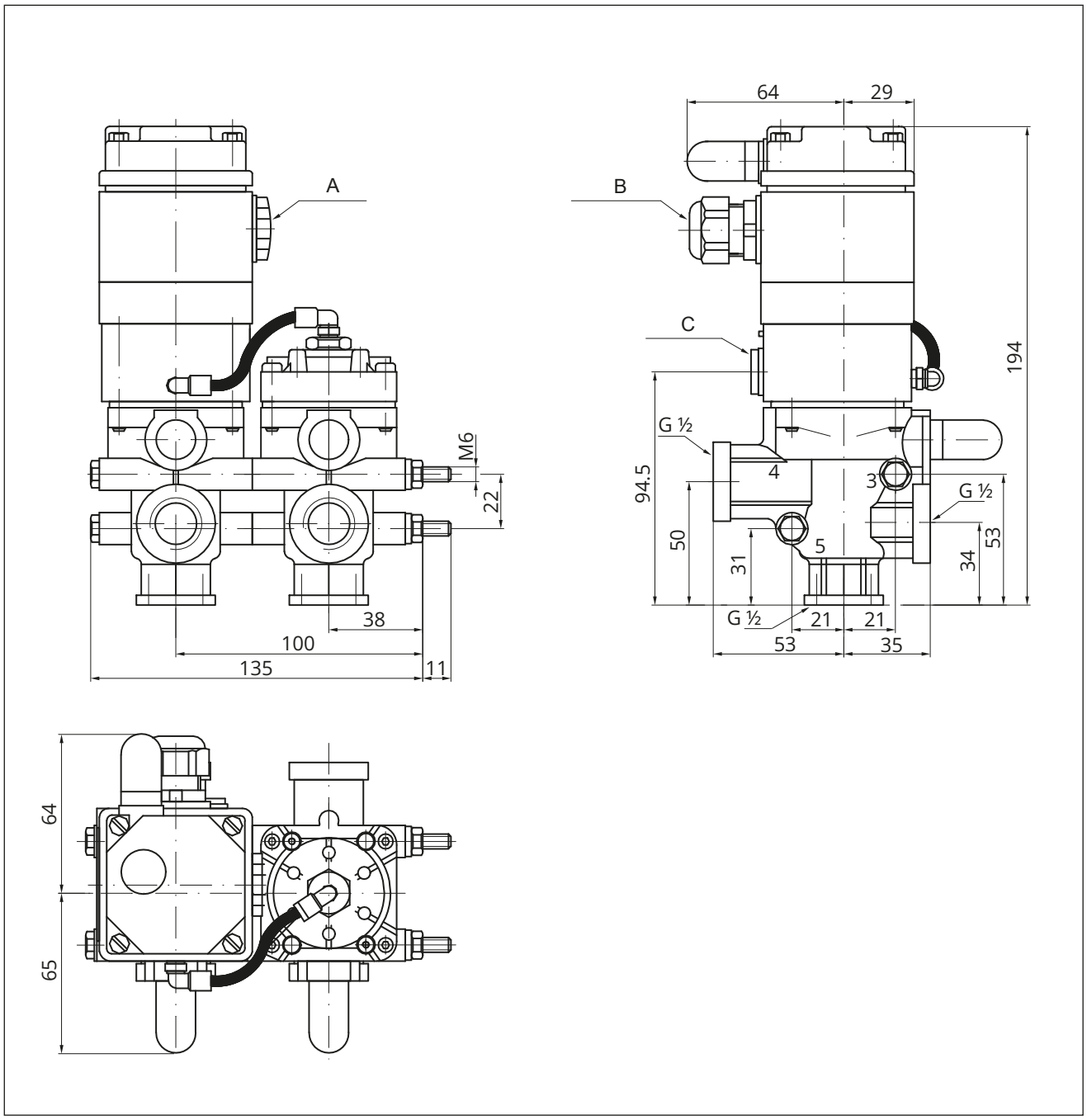

Fig. 10: *Dimensions in mm · Type 3963-xxx8x14x1: 6/2-way solenoid valve, single controlled K_{VS} 4.3*

A M20x1.5 screw plug

B M20x1.5 cable gland

C G ¼ blanking plug

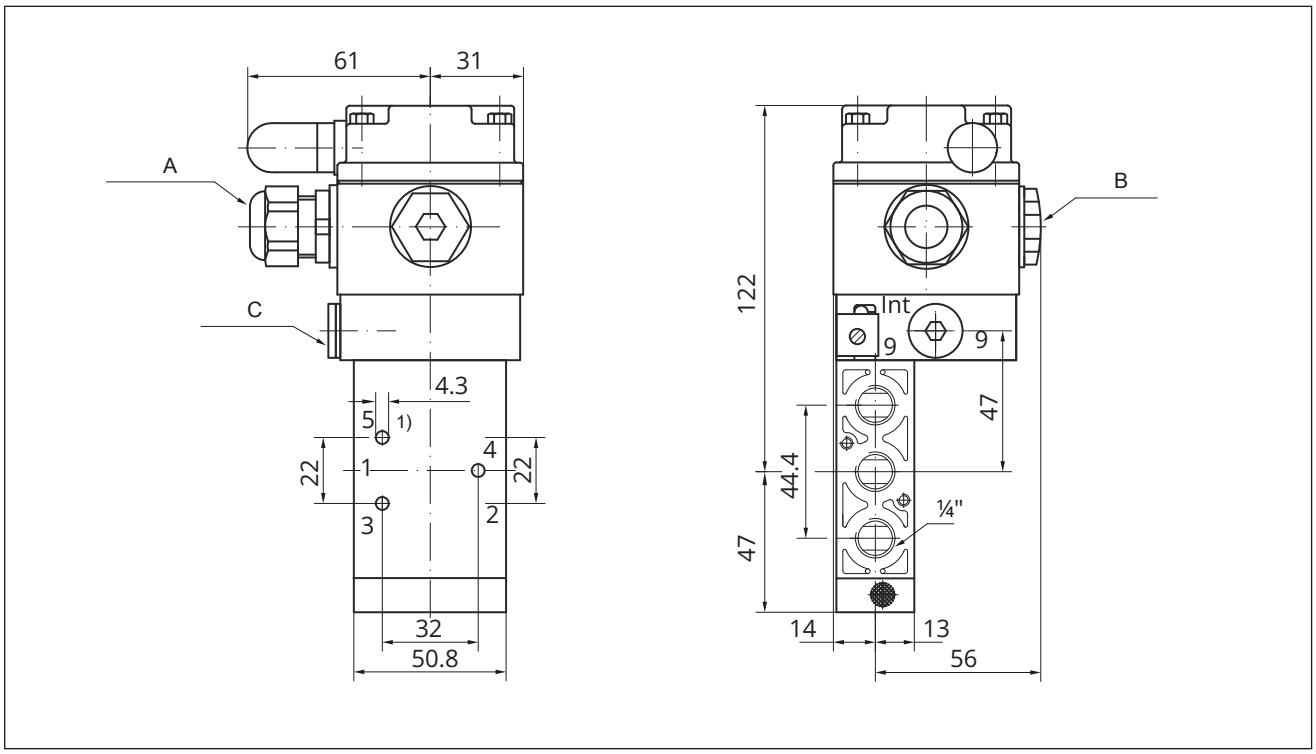

Fig. 11: *Dimensions in mm · Type 3963-xxx0x13/-xxx1x13: 3/2- or 5/2-way solenoid valve, single controlled K_{VS} 1.4*

A M20x1.5 cable gland

B M20x1.5 screw plug

C G ¼ blanking plug

1) Port 5 sealed when the 3/2-way function is used

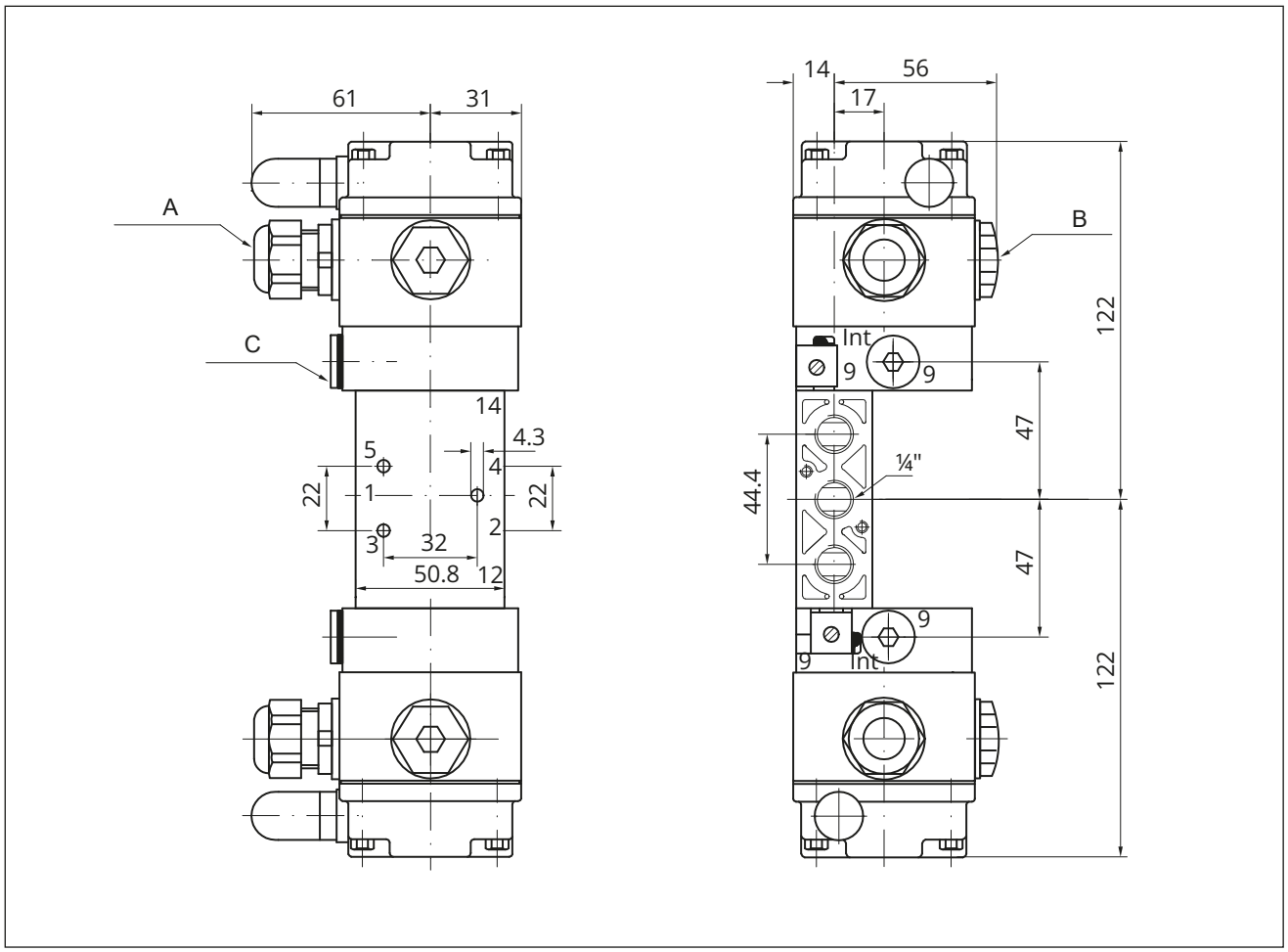

Fig. 12: *Dimensions in mm · Types 3963-xxx2x13/-xxx3x13/-xxx5x13: 5/2-way or 5/3-way solenoid valve, double controlled, K_{VS} 1.4*

A M20x1.5 cable gland
B M20x1.5 screw plug
C G ¼ blanking plug

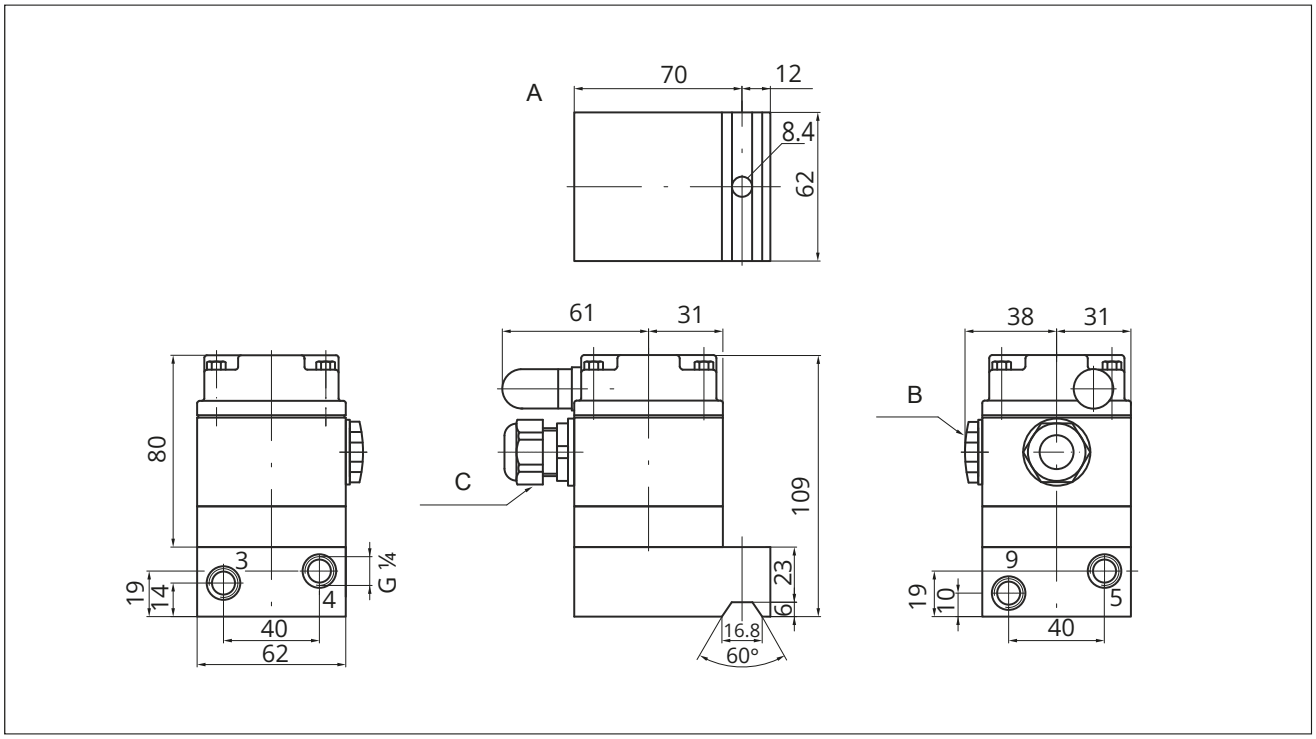

Fig. 13: *Dimensions in mm · Type 3963-xxx0x22: 3/2-way solenoid valve, single controlled, K_{VS} 0.32*

A Bottom view of adapter plate
B M20x1.5 screw plug
C M20x1.5 cable gland

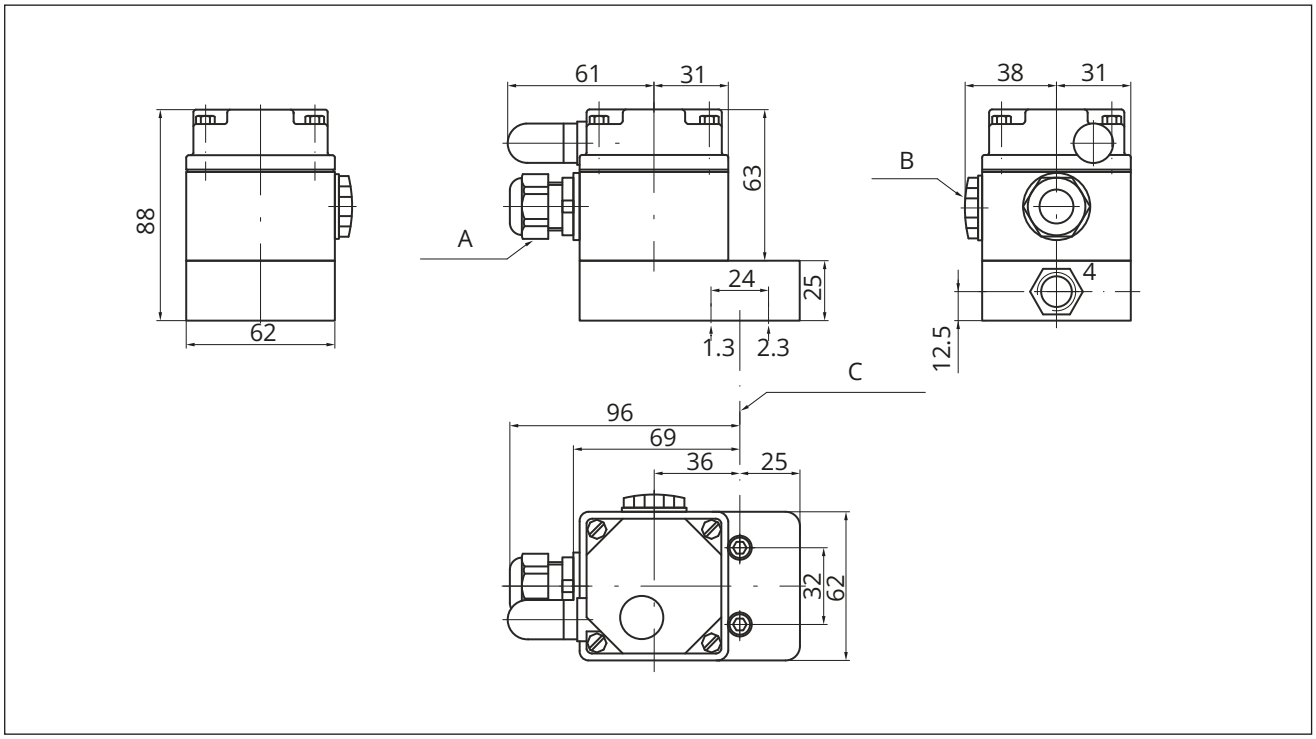

Fig. 14: *Dimensions in mm · Type 3963-xxx0x01/-xxx1x01: 3/2- or 5/2-way solenoid valve, single controlled K_{VS} 0.16*

A M20x1.5 cable gland
B M20x1.5 screw plug
C NAMUR fixing level

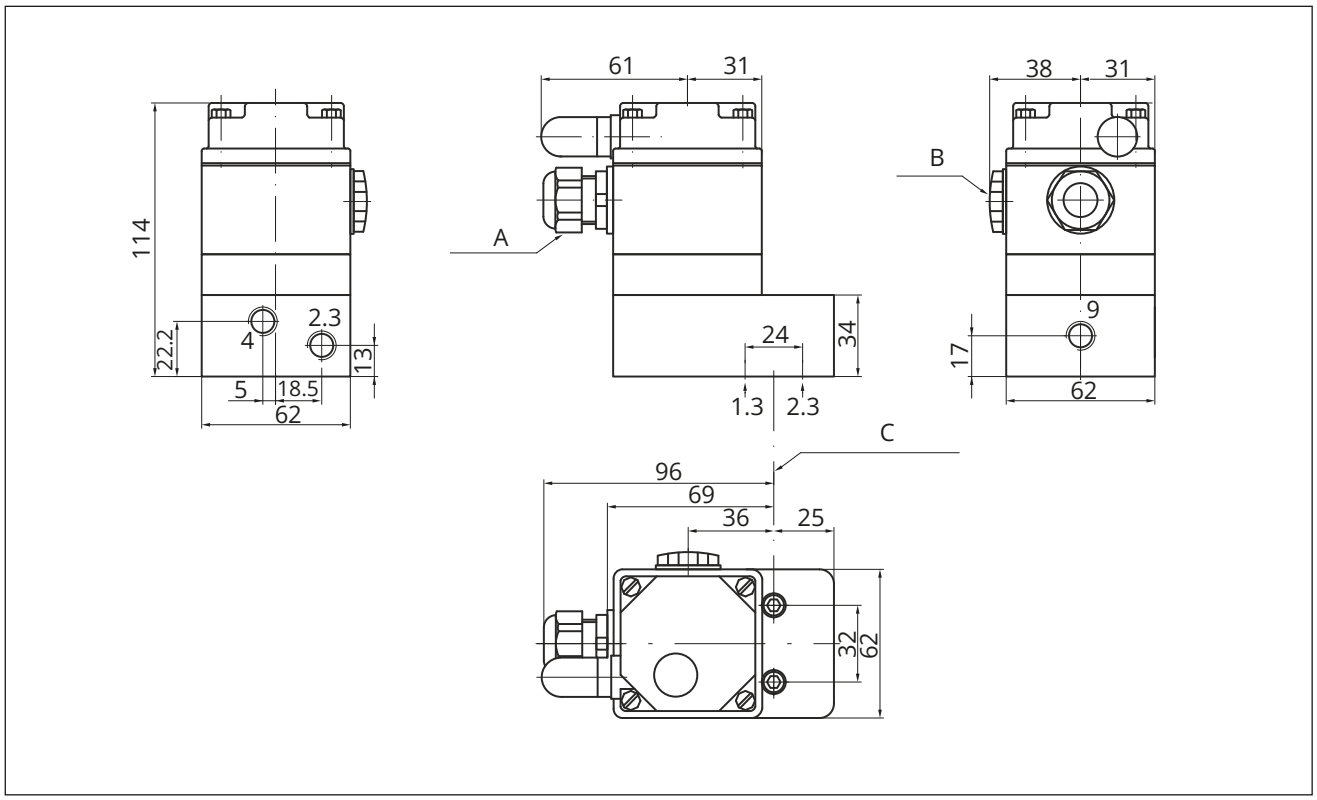

Fig. 15: *Dimensions in mm · Type 3963-xxx0x02: 3/2-way solenoid valve, single controlled, K_{VS} 0.32*

A M20x1.5 cable gland

B M20x1.5 screw plug

C NAMUR fixing level

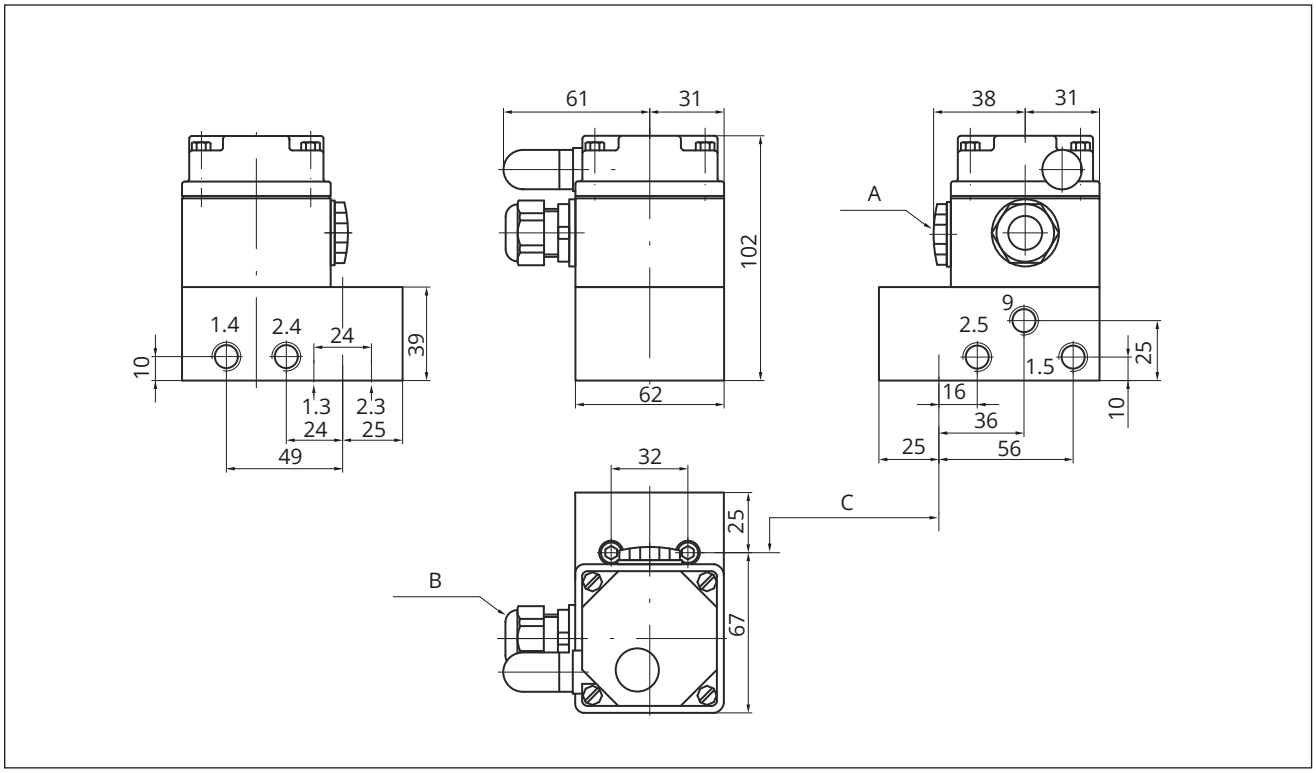

Fig. 16: *Dimensions in mm · Type 3963-xxx8x01: 6/2-way solenoid valve, single controlled, K_{VS} 0.16*

A M20x1.5 screw plug
B M20x1.5 cable gland
C NAMUR fixing level

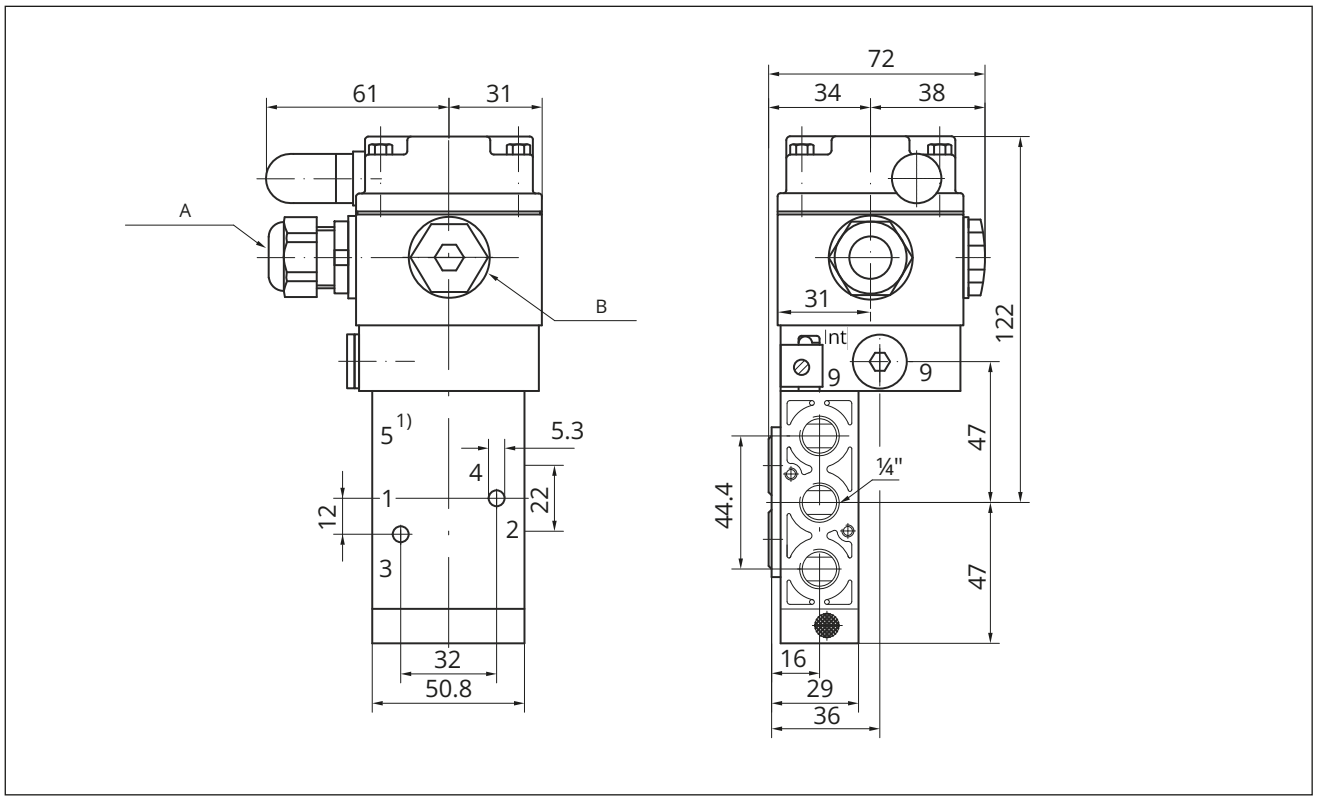

Fig. 17: *Dimensions in mm · Type 3963-xxx0x03/-xxx1x03: 3/2- or 5/2-way solenoid valve, single controlled K_{VS} 1.4*

A M20x1.5 cable gland

B M20x1.5 screw plug

1) Port 5 sealed when the 3/2-way function is used

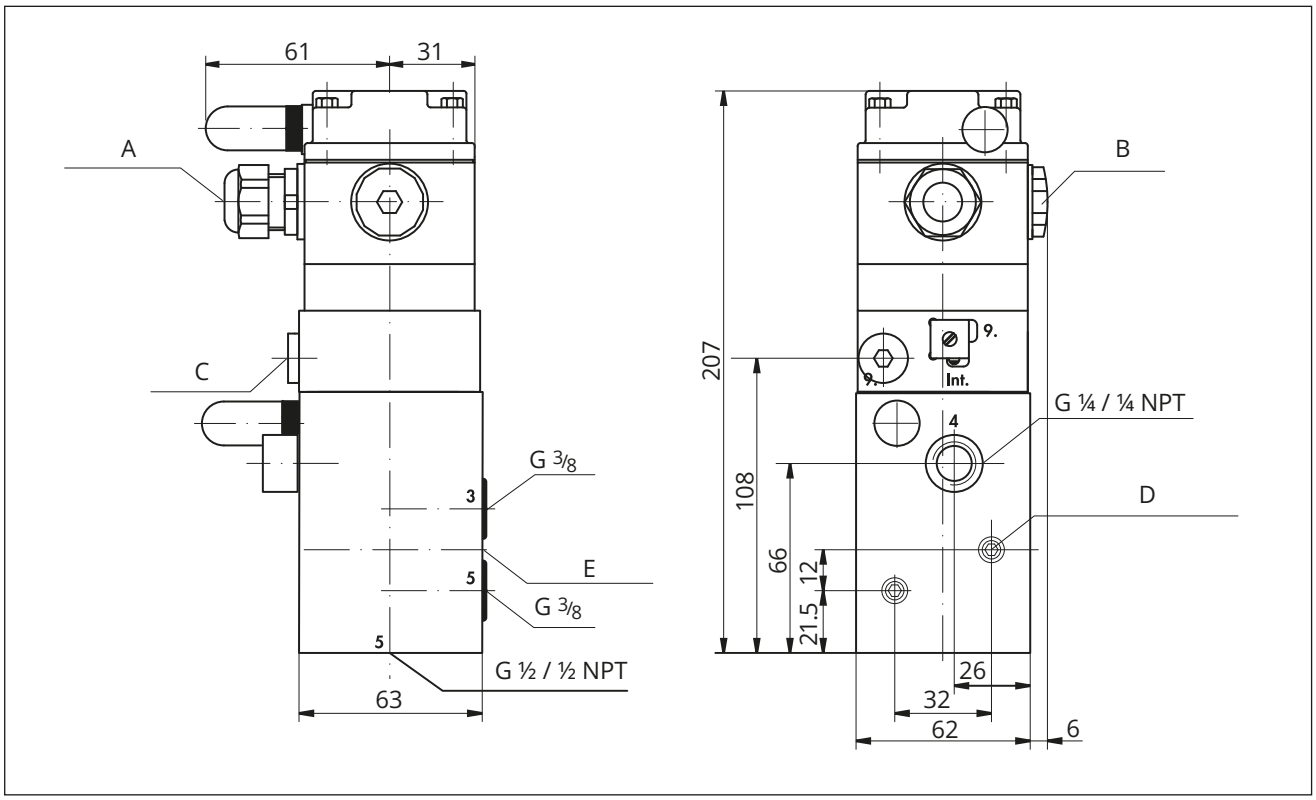

Fig. 18: *Dimensions in mm · Type 3963-xxx0x07: 3/2-way solenoid valve, single controlled, K_{VS} 2.0*

A M20x1.5 cable gland
B M20x1.5 screw plug
C G ¼ blanking plug
D Cap screw ISO 4762, M6x60 with spring washer, DIN 128, A5
E NAMUR interface G ¼

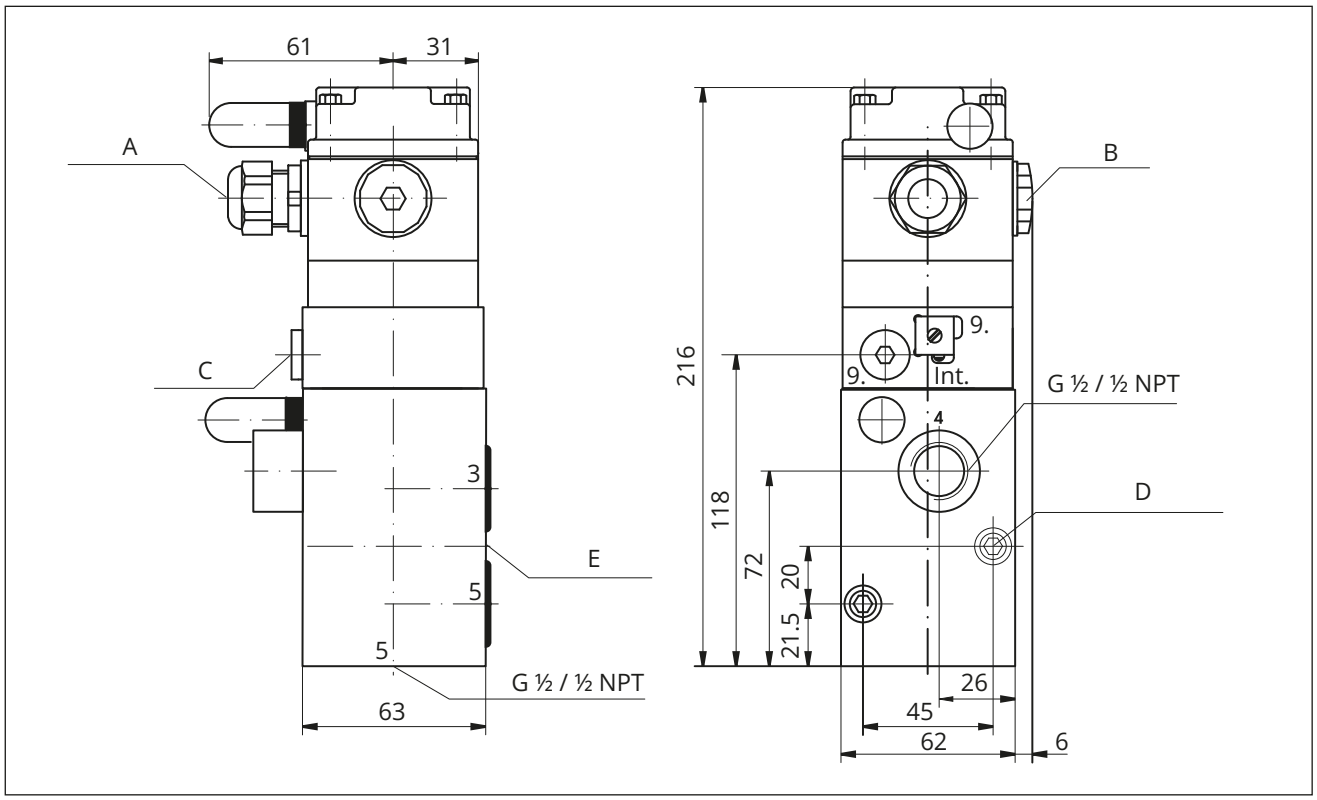

Fig. 19: *Dimensions in mm · Type 3963-xxx0x04: 3/2-way solenoid valve, single controlled, K_{VS} 4.3*

A M20x1.5 cable gland
B M20x1.5 screw plug
C G ¼ blanking plug
D Cap screw ISO 4762, M6x60 with spring washer, DIN 128, A6
E NAMUR interface G ½

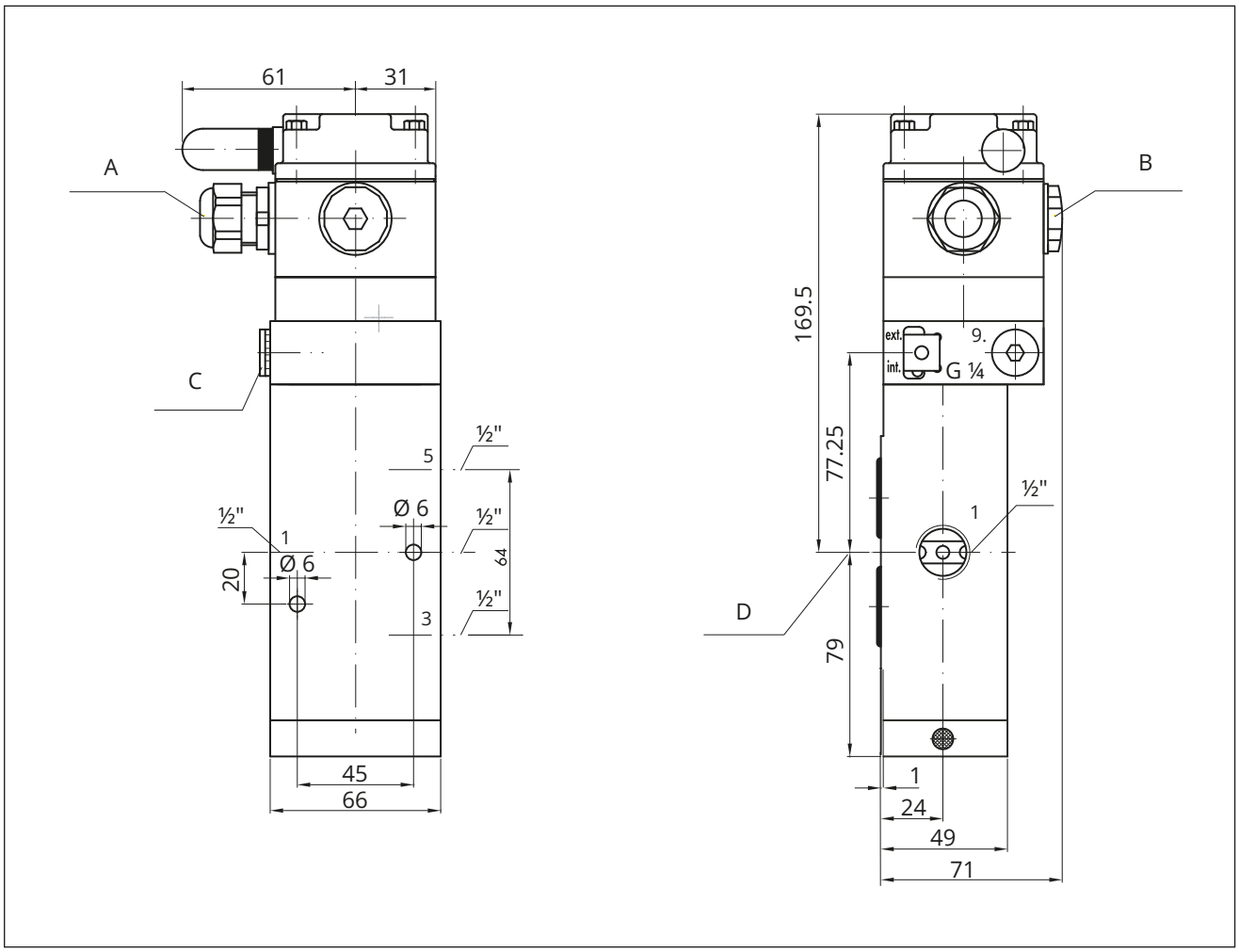

Fig. 20: *Dimensions in mm · Type 3963-xxx1x06: 5/2-way solenoid valve, single controlled, K_{VS} 2.9*

A M20x1.5 cable gland
B M20x1.5 screw plug
C G ¼ blanking plug
D NAMUR interface

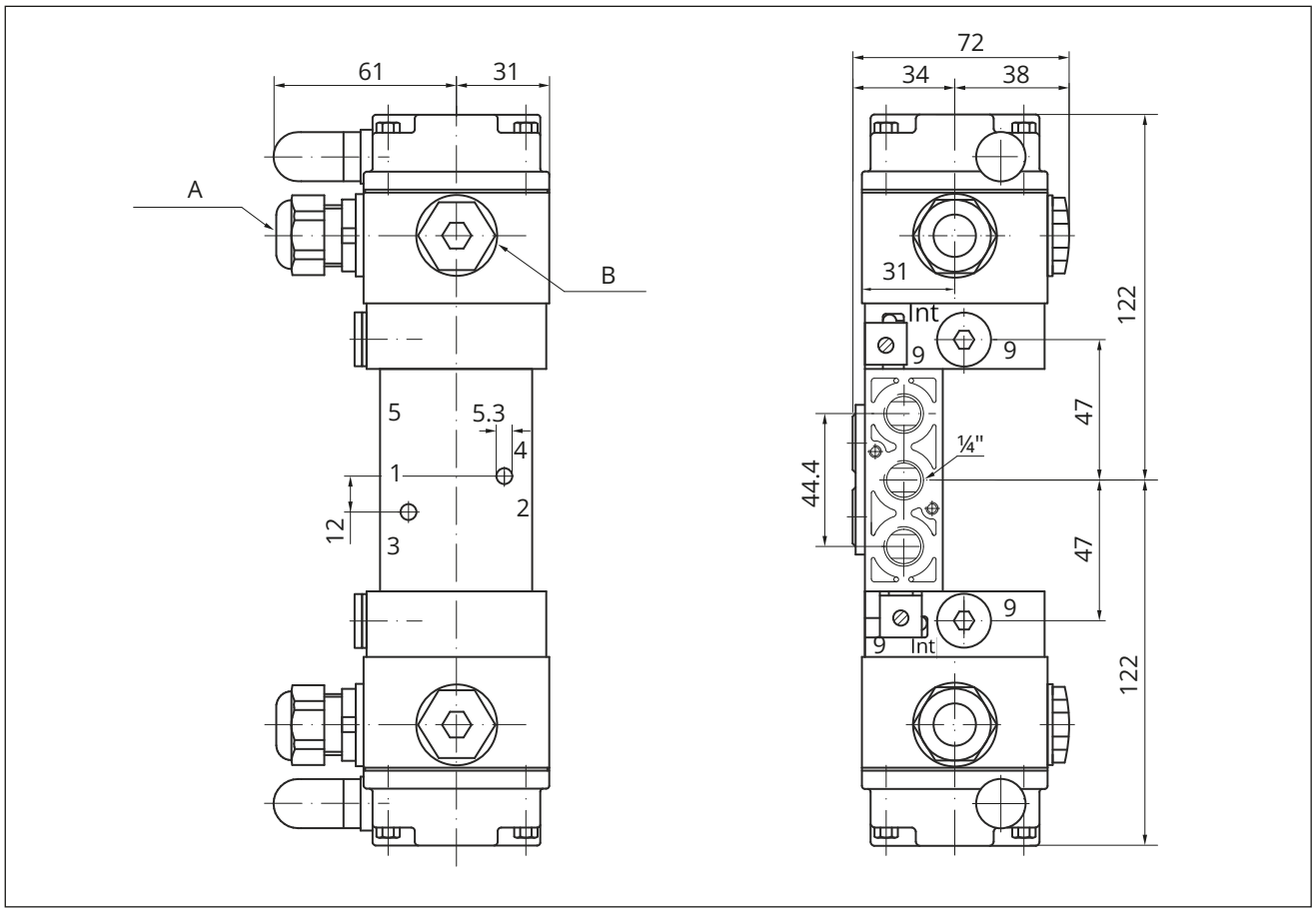

Fig. 21: *Dimensions in mm · Types 3963-xxx2x03/-xxx3x03/-xxx5x05: 5/2-way or 5/3-way solenoid valve, double controlled, K_{VS} 1.4*

A M20x1.5 cable gland

B M20x1.5 screw plug

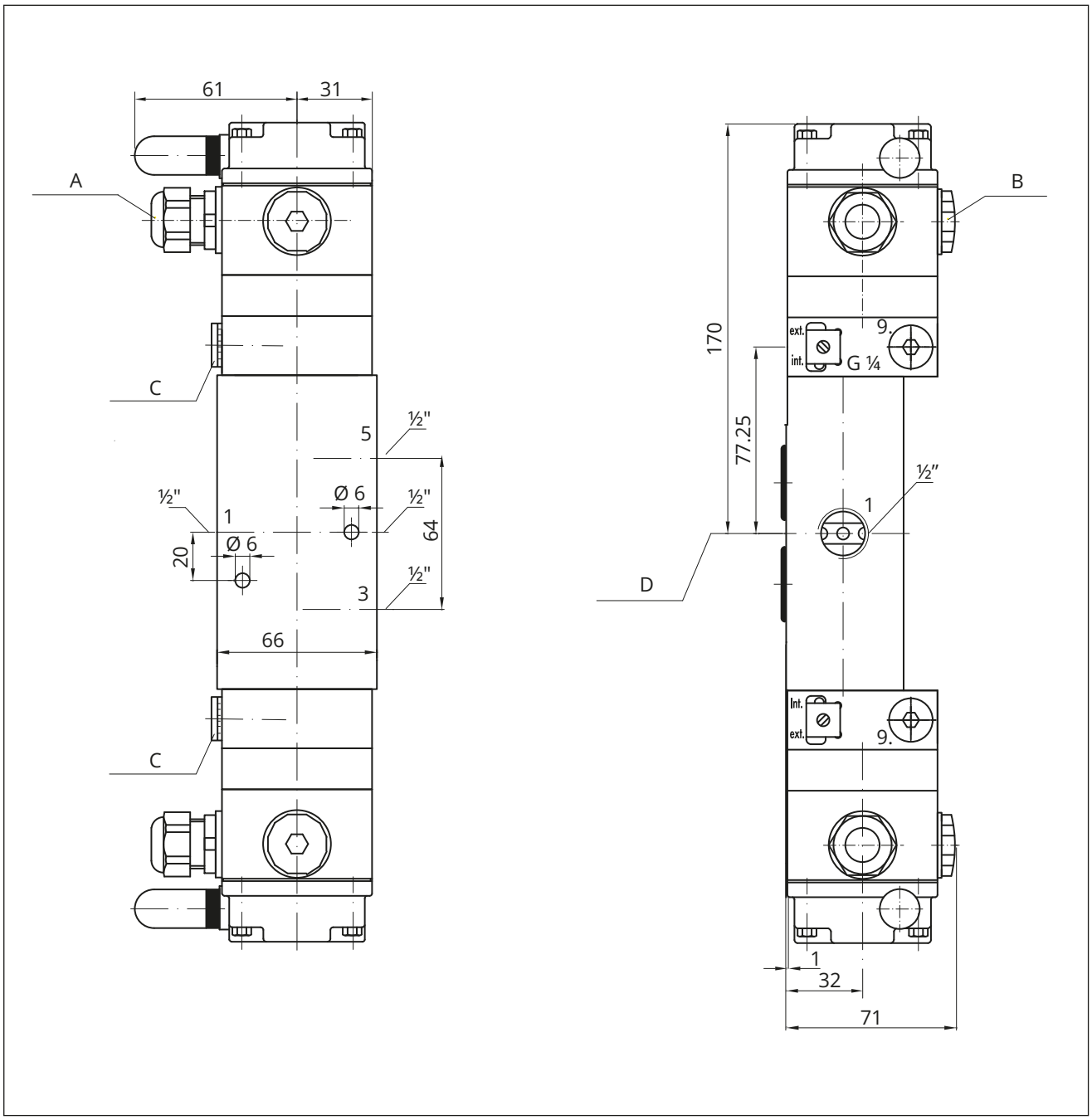

Fig. 22: *Dimensions in mm · Type 3963-xxx2x06: 5/2-way solenoid valve, double controlled, K_{VS} 2.9*

A M20x1.5 cable gland
B M20x1.5 screw plug
C G ¼ blanking plug
D NAMUR interface

Accessories

Table 8: *Accessories for Type 3963 Solenoid Valves*

Designation	Order no.
Cable socket according to EN 175301-803, black polyamide, type A, three-pole, with PG 9 cable gland and gasket of nitrile butadiene rubber, degree of protection IP65	0790-6658
Cable socket with LED according to EN 175301-803, form A, made of black polyamide, degree of protection IP65	1170-4069
Cable breakage protection with activation delay, enclosure for 35 mm rail mounting, IP20 (for Type 3963-X1 with 6 V DC nominal signal)	3994-0160
Filter made of polyethylene, G 1/G ½ connection, degree of protection IP54 (required for actuator size >1400 cm²)	1400-5268
Muffler made of polyethylene, G ¼ connection, degree of protection IP54	8504-0066
Muffler made of polyethylene, G ½ connection, degree of protection IP54	8504-0068
Filter check valve in housing with G ¼ thread made of polyamide, degree of protection IP65	1790-7408
Filter check valve in housing with G ¼ thread made of 1.4301, degree of protection IP65	1790-7253
Filter check valve in housing with G ¼ thread made of polyamide, degree of protection NEMA 4	1790-9645
Filter check valve in housing with G ¼ thread made of 1.4301, degree of protection NEMA 4	1790-9646
Mounting base for G-profile rail 32 according to EN 50035 (2 pcs. required)	1400-5930
Mounting base for 35 mm top-hat rail according to EN 50022 (2 pcs. required)	1400-5931
Mounting plate for wall mounting including fastening screws	1400-6726
Vent plug G ¼, polyamide, degree of protection IP65	1991-0451

Table 9: *Mounting kits for Type 3963 Solenoid Valves with threaded connections*

Designation	Order no.
Mounting kit for linear actuators, 175 and 240 cm² actuator area, G ¼ connection, with pipe fitting, G ¼/G ¼ connection, made of CrNiMo steel	1400-6759
Mounting kit for linear actuators, 350, 355, 700 and 750 cm² actuator area, G ⅜ connection	
with pipe fitting, G ½/G ⅜ connection, made of CrNiMo steel	1400-6735
with pipe fitting, G ¼/G ⅜ connection, made of CrNiMo steel	1400-6761
Mounting kit for linear actuators, 1000 and 1400-60 cm² actuator area, G ¾ connection with pipe fitting, G ½/G ¾ connection, made of CrNiMo steel	1400-6736
Mounting kit for linear actuators, 1400-120, 1400-250, 2800 and 2x 2800 cm² actuator area, G 1 connection, with pipe fitting, G ½/G 1 connection, made of CrNiMo steel	1400-6737
Mounting kit for linear actuators, 175 and 240 cm² actuator area, G ¼ connection, with mounting bracket made of CrNiMo steel	
and screw fittings for 8×1 pipe, G ¼/G ¼ connection, made of zinc-plated steel	1400-6749
and screw fittings for 8×1 pipe, G ¼/G ¼ connection, made of CrNiMo steel	1400-6750
Mounting kit for linear actuators, 350, 355, 700 and 750 cm² actuator area, G ⅜ connection, with mounting bracket of CrNiMo steel	
and screw fittings for 8×1 pipe, G ¼/G ⅜ connection, made of zinc-plated steel	1400-6738
and screw fittings for 8×1 pipe, G ¼/G ⅜ connection, made of CrNiMo steel	1400-6739
and screw fittings for 12×1 pipe, G ¼/G ⅜ connection, made of CrNiMo steel	1400-6743
and screw fittings for 10×1 pipe, G ½/G ⅜ connection, made of polyamide	1400-6744
and screw fittings for 10×1 pipe, G ¼/G ⅜ connection, made of polyamide	1400-6745

Designation	Order no.
Mounting kit for linear actuators, 700 and 750 cm² actuator area, G ⅜ connection, with mounting bracket of CrNiMo steel	
and screw fittings for 12×1 pipe, G ½/G ⅜ connection, made of zinc-plated steel	1400-6740
and screw fittings for 12×1 pipe, G ¼/G ⅜ connection, made of zinc-plated steel	1400-6741
and screw fittings for 12×1 pipe, G ½/G ⅜ connection, made of CrNiMo steel	1400-6742

Table 10: *Mounting kits for Type 3963 Solenoid Valves with NAMUR interface*

Designation	Order no.
Mounting kit for linear actuators, 350, 355, 700 and 750 cm² actuator area, G ⅜ connection, with NAMUR rib using adapter plate for NAMUR rib/NAMUR interface	
Adapter plate for NAMUR rib/NAMUR interface	1400-6751
and screw fittings for 12×1 pipe, G ¼/G ⅜ connection, made of zinc-plated steel	1400-6746
and screw fittings for 12×1 pipe, G ¼/G ⅜ connection, made of CrNiMo steel	1400-6747
and screw fittings for 10×1 pipe, G ¼/G ⅜ connection, made of polyamide	1400-6748
Mounting kit for linear actuators, 175, 240 cm² actuator area, G ¼ connection, with NAMUR rib using adapter plate for NAMUR rib/NAMUR interface	
Adapter plate for NAMUR rib/NAMUR interface	1400-6751
and screw fittings for 6×1 pipe, G ¼/G ¼ connection, made of zinc-plated steel	1400-6752
and screw fittings for 6×1 pipe, G ¼/G ¼ connection, made of CrNiMo steel	1400-6753
and screw fittings for 10×1 hose, G ¼/G ¼ connection, made of polyamide	1400-6756
Mounting kit for linear actuators, 350, 355, 700 and 750 cm² actuator area, G ⅜ connection, with NAMUR rib using adapter plate for NAMUR rib/NAMUR interface	
Adapter plate for NAMUR rib/NAMUR interface	1400-6751
and screw fittings for 8×1 pipe, G ¼/G ⅜ connection, made of zinc-plated steel	1400-6754
and screw fittings for 8×1 pipe, G ¼/G ⅜ connection, made of CrNiMo steel	1400-6755
and screw fittings for 10×1 pipe, G ¼/G ⅜ connection, made of polyamide	1400-6757
Mounting kit for linear actuators, 175 and 240 cm² actuator area, G ¼ connection, with pipe fitting, G ¼/G ¼ connection, made of CrNiMo steel	1400-6759
Mounting kit for Type 3353 Angle Seat Valve with adapter plate for NAMUR interface made of 1.4301	1400-3001

Table 11: *Accessories for mounting kits*

Designation	Order no.
Support for NAMUR rib (required when a positioner or limit switch is additionally attached to a linear actuator mounted on a valve, DN 50)	0320-1416
M8x60 hex screw, A4, DIN 931	8320-0131
Adapter plate for NAMUR interface on NAMUR rib, G ¼	1400-6751
Adapter plate for NAMUR rib/NAMUR interface, Ematal coating, ¼ NPT connection	1400-9924
Connection block for Type 3277 Linear Actuator with mounted Types 3766, 3767, 3793 and 3730 Positioners	
G ¼ connection	1400-8813
¼ NPT connection	1400-8814
Pressure gauge mounting block, 1x Output and 1x Supply, made of stainless steel/brass, for connection block	1400-6950

Designation	Order no.
Piping for actuator with fail-safe action “stem retracts”	
240 cm^2 actuator area, zinc-plated steel	1400-6444
240 cm^2 actuator area, CrNiMo steel	1400-6445
350 cm^2 actuator area, zinc-plated steel	1400-6446
350 cm^2 actuator area, CrNiMo steel	1400-6447
700 cm^2 actuator area, zinc-plated steel	1400-6448
700 cm^2 actuator area, CrNiMo steel	1400-6449

i ***Note***

The "NAMUR interface according to VDI/VDE 3845" version in combination with K_{VS} 0.32 has an Ematal coating.

Type 3963-		x	x	x	x	x	x	x	x	x	x	x	x	x	x	x	x
Type of protection		|	|	|	|	|	|	|	|	|	|	|	|	|	|	|	|	|
Without		0	|	|	|	|	|	|	|	|	|	|	|	|	|	|	|
ATEX[1)]	II 2 G Ex ia IIC T6...T4 Gb (max. 60/70/80 °C in T6/T5/T4)	1	|	|	|	|	|	|	|	|	|	|	|	|	|	|	|
FM	Ex ia (max. 60/70/80 °C in T6/T5/T4)	3	|	|	|	|	|	|	|	|	|	|	|	|	|	|	|
ATEX[2)]	II 3G Ex nA II T6 Gc II 3G Ex ic IIC T6 Gc	8	|	|	|	|	|	|	|	|	|	|	|	|	|	|	|
				|	|	|	|	|	|	|	|	|	|	|	|	|	|
Nominal signal				|	|	|	|	|	|	|	|	|	|	|	|	|	|
6 V DC, 5.47 mW power consumption				1	|	|	|	|	|	|	|	|	|	|	|	|	|
12 V DC, 13.05 mW power consumption				2	|	|	|	|	|	|	|	|	|	|	|	|	|
24 V DC, 26.71 mW power consumption				3	|	|	|	|	|	|	|	|	|	|	|	|	|
230 V AC, 0.46 VA power consumption (without explosion protection)				5	|	|	|	|	|	|	|	|	|	|	|	|	|
115 V AC, 0.17 VA power consumption (without explosion protection)				6	|	|	|	|	|	|	|	|	|	|	|	|	|
					|	|	|	|	|	|	|	|	|	|	|	|	|
Manual override					|	|	|	|	|	|	|	|	|	|	|	|	|
Without manual override SIL/TÜV					0	|	|	|	|	|	|	|	|	|	|	|	|
Pushbutton underneath the enclosure cover SIL/TÜV					1	|	|	|	|	|	|	|	|	|	|	|	|
External pushbutton (accessible using a pin)					2	|	|	|	|	|	|	|	|	|	|	|	|
External switch (accessible using a screwdriver)					3	|	|	|	|	|	|	|	|	|	|	|	|
						|	|	|	|	|	|	|	|	|	|	|	|
Switching function						|	|	|	|	|	|	|	|	|	|	|	|
3/2-way function with spring-return mechanism SIL/TÜV (all K_{VS} coefficients)						0	|	|	|	|	|	|	|	|	|	|	|
5/2-way function with spring return mechanism (K_{VS} 0.16, 1.4, 2.9, 4.3; SIL with K_{VS} 0.16)						1	|	|	|	|	|	|	|	|	|	|	|
5/2-way function with two detent positions TÜV (K_{VS} 1.4/2.9)						2	|	|	|	|	|	|	|	|	|	|	|
5/3-way function with spring-centered mid-position (ports 2 and 4 closed) (K_{VS} 1.4)						3	|	|	|	|	|	|	|	|	|	|	|
5/3-way function with spring-centered mid-position (ports 2 and 4 vented) TÜV (K_{VS} 1.4)						5	|	|	|	|	|	|	|	|	|	|	|
6/2-way function with spring return mechanism (K_{VS} 0.16/4.3; SIL with K_{VS} 0.16)						8	|	|	|	|	|	|	|	|	|	|	|
							|	|	|	|	|	|	|	|	|	|	|
Restrictors							|	|	|	|	|	|	|	|	|	|	|
Without restrictors SIL/TÜV (all K_{VS} coefficients)							0	|	|	|	|	|	|	|	|	|	|
1 exhaust air restrictor (3/2-way function/NAMUR interface or mounting block/K_{VS} 0.16)							1	|	|	|	|	|	|	|	|	|	|
2 exhaust air restrictors (5/2-way function/NAMUR interface/K_{VS} 0.16)							2	|	|	|	|	|	|	|	|	|	|
1 supply air/1 exhaust air restrictor (3/2-way function/NAMUR interface/K_{VS} 0.16)							3	|	|	|	|	|	|	|	|	|	|
								|	|	|	|	|	|	|	|	|	|

Mounting	|	|	|	|	|	|	|	|	|	|	|
NAMUR interface according to VDI/VDE 3845 SIL/TÜV (all K_{VS} coefficients)[8)]	0	|	|	|	|	|	|	|	|	|	|
Threaded connection for rail, wall or pipe mounting SIL/TÜV (K_{VS} 0.16, 0.32, 1.4, 4.3)	1	|	|	|	|	|	|	|	|	|	|
NAMUR rib according to IEC 60534-6 (NAMUR) SIL/TÜV (K_{VS} 0.32)	2	|	|	|	|	|	|	|	|	|	|
Mounting block for Type 3277 Linear Actuator SIL/TÜV (K_{VS} 0.16, 0.32)	3	|	|	|	|	|	|	|	|	|	|
Flange (Type 3963), only as spare part (K_{VS} 0.01/0.16)	4	|	|	|	|	|	|	|	|	|	|
		|	|	|	|	|	|	|	|	|	|
K_{VS} coefficient[3)]		|	|	|	|	|	|	|	|	|	|
0.16 SIL/TÜV		1	|	|	|	|	|	|	|	|	|
0.32 SIL/TÜV[8)]		2	|	|	|	|	|	|	|	|	|
1.4 TÜV		3	|	|	|	|	|	|	|	|	|
4.3 SIL/TÜV		4	|	|	|	|	|	|	|	|	|
0.01 (as spare part)		5	|	|	|	|	|	|	|	|	|
2.9 (NAMUR interface)		6	|	|	|	|	|	|	|	|	|
2.0 SIL/TÜV (NAMUR interface)		7	|	|	|	|	|	|	|	|	|
			|	|	|	|	|	|	|	|	|
Pneumatic connection			|	|	|	|	|	|	|	|	|
G ¼ (K_{VS} 0.16/0.32/1.4/2.0)			0	|	|	|	|	|	|	|	|
¼ NPT (K_{VS} 0.16/0.32/1.4/2.0)			1	|	|	|	|	|	|	|	|
G ½ (K_{VS} 2.9/4.3)			2	|	|	|	|	|	|	|	|
½ NPT (K_{VS} 2.9/4.3)			3	|	|	|	|	|	|	|	|
Without (pilot valve as spare part/mounting block for Type 3277 Linear Actuator)			4	|	|	|	|	|	|	|	|
				|	|	|	|	|	|	|	|
Pilot supply				|	|	|	|	|	|	|	|
Internal pilot supply for actuators for on/off service				0	|	|	|	|	|	|	|
External pilot supply for actuators for throttling service				1	|	|	|	|	|	|	|
					|	|	|	|	|	|	|
Electrical connection					|	|	|	|	|	|	|
Blanking plug M20x1.5					0	0	|	|	|	|	|
M20x1.5 cable gland, black polyamide					0	1	|	|	|	|	|
M20x1.5 cable gland, blue polyamide					1	1	|	|	|	|	|
M20x1.5 to ½ NPT adapter, aluminum					1	2	|	|	|	|	|
M20x1.5 cable gland (CEAG), black polyamide					1	3	|	|	|	|	|
M20x1.5 cable gland, nickel-plated brass					1	4	|	|	|	|	|
M20x1.5 cable gland, nickel-plated brass, blue					1	5	|	|	|	|	|
M20x1.5 cable gland (CEAG), blue polyamide					1	6	|	|	|	|	|
M20x1.5 cable gland (Jacob), blue polyamide					1	7	|	|	|	|	|
Device connector, type A, according to DIN EN 175301-803, black polyamide [1)]					2	3	|	|	|	|	|
Device connector with LED according to DIN EN 175301-803, black polyamide [1)]					2	5	|	|	|	|	|
M20x1.5 to ½ NPT adapter, stainless steel					2	6	|	|	|	|	|
							|	|	|	|	|
Degree of protection							|	|	|	|	|
IP54 with polyethylene filter							0	|	|	|	|
IP65 with filter check valve made of polyamide							1	|	|	|	|
IP65 with filter check valve made of stainless steel							2	|	|	|	|
NEMA 4 with filter check valve made of polyamide							4	|	|	|	|
NEMA 4 with filter check valve made of stainless steel							5	|	|	|	|
IP65 with labyrinth-type vent plug							6	|	|	|	|
								|	|	|	|

Ambient temperature[4]	|	|	|	|
-20 to +80 °C	0	|	|	|
-45 to +80 °C	2	|	|	|
		|	|	|
Safety function		|	|	|
Without		0	|	|
SIL[5]		1	|	|
TÜV[6]		2	|	|
		|	|	|
Special version[7]		|	|	|
Without		0	0	0
Material		|	|	|
Connecting plate/booster valve enclosure made of 1.4404 on request		0	0	1
Explosion protection		|	|	|
CCC Ex Ex ia IIC T4...T6 Gb		0	0	9

1) EC type examination certificate PTB 01 ATEX 2085

2) Statement of conformity PTB 01 ATEX 2086 X

3) The air flow rate when p_1 = 2.4 bar and p_2 = 1.0 bar can be calculated using the following formula: $Q = K_{VS} \times 36.22$ in m^3/h.

4) The permissible ambient temperature of the solenoid valve depends on the permissible ambient temperature of the components, type of protection and temperature class.

5) SIL according to IEC 61508

6) Emergency release or locking of compressed air supply

7) Further special versions on request

8) "NAMUR interface according to VDI/VDE 3845" version in combination with K_{VS} 0.32 with Ematal coating

Associated Mounting and Operating Instructions

– Type 3963 ▶ EB 3963

Associated Safety Manual

– Type 3963 ▶ SH 3963

Associated Information Sheet

– Type 3963 ▶ T 8350

2026-10-21 | English | 4000300742 | 1.3