DATA SHEET

T 5857 EN

Type 5857 Electric Actuator

CE

Application

Electric actuator designed for valves used in heating, ventilation and air-conditioning systems



Fig. 1: *Type 5857 Electric Actuator*

Special features

The electric actuator is suitable for force-locking attachment to Types 3222, 3222 N, 2488 and 2488 N Valves as well as special versions of Types 3260 and 3226 Valves.

- Motor switched off by torque switches
- Handwheel
- Travel indicator
- No maintenance

Versions

- Version with three-step signal
  - Synchronous motor with maintenance-free gearing
- Version with digital positioner
  - Stepper motor with maintenance-free gearing
  - Adjustment of the direction of action at the actuator
  - Start-up at the actuator
  - Settings made using the TROVIS-VIEW software

Design and principle of operation

⇨ See Fig. 2.

The Type 5857 Electric Actuator is a linear actuator, which is used in combination with SAMSON valves in industrial plants as well as in heating, ventilation and air-conditioning systems.

Depending on the actuator version, either a three-step signal or continuous signal issued by an electronic controller is used to control the electric actuator. The electric actuator consists of a reversible motor and a maintenance-free planetary gear with ball screw drive. The motor is switched off by torque switches in the end positions or in case of overload.

The Type 5857 Electric Actuator is preferably combined with SAMSON Types 3222, 3222 N, 2488 and 2488 N Valves as well as special versions of Type 3260 and Type 3226 Valves.

The electric actuator is connected to the valve by a coupling nut (4), which provides a force-locking connection between the actuator stem and the plug stem of the valve. The control signal from the input is transferred over the motor and the connected gear and is applied as the positioning force to move the actuator stem. When the actuator stem (3) extends, the valve is closed, opposing the force of the valve spring (7). When the actuator stem retracts, the valve is opened as the plug

stem (6) follows the motion of the return spring. The motor is switched off by torque switches when an end position is reached or in case the motor is overloaded. Travel and direction of action can be read off the travel indicator (5) on the side of the actuator housing.

The actuator has a handwheel that is used to manually position the valve when the actuator is de-energized.

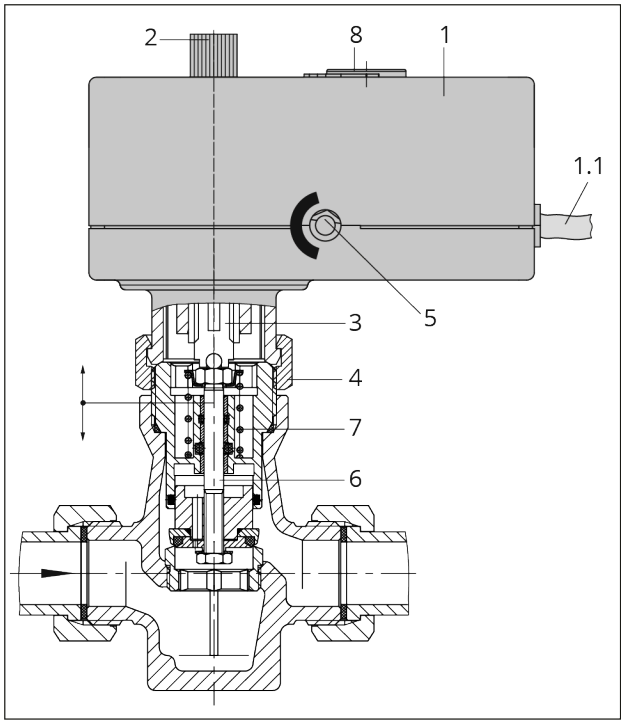

Fig. 2: *Valve with actuator*

1 Actuator
1.1 Connecting cable
2 Handwheel
3 Actuator stem
4 Coupling nut
5 Travel indicator
6 Plug stem
7 Valve spring
8 Cover (serial interface, direction of action switch, initialization key and LEDs)

Settings

The digital positioner settings can be changed in the TROVIS-VIEW software.

Table 1: *Settings with TROVIS-VIEW*

Configuration	Default setting	Adjustment range
Input signal		
Lower range value	0.0 V	0.0 to 7.5 V
Upper range value	10.0 V	2.5 to 10.0 V
Position feedback signal		
Lower range value	0.0 V	0.0 to 10.0 V
Upper range value	10.0 V	0.0 to 10.0 V
Functions		
Detect input signal failure	No	Yes/No
Positioning value upon input signal failure	Internal positioning value	Internal positioning value/Last travel value
Internal positioning value	0.0 %	0.0 to 100 %
Value below limit (end position guiding)	1.0 %	0.0 to 49.9 %
Value above limit (end position guiding)	97.0 %	50.0 to 100.0 %
Blockage		
Blockage detection	No	Yes/No
Blockage removal	No	Yes/No
Indicate blockage	No	Yes/No
Blocking protection	No	Yes/No
Travel		
Limited travel range	100.0 %	30.0 to 130 %
Travel adjustment	Absolute	Absolute/Relative
Speed	Normal	Slow/Normal/Fast
Dead band (switching range)	2.0 %	0.5 to 5.0 %
Characteristic type	Linear	Linear/Equal percentage/Reverse equal percentage/User-defined

Electrical connection

The ends of the connecting cable are fitted with wire-end ferrules.

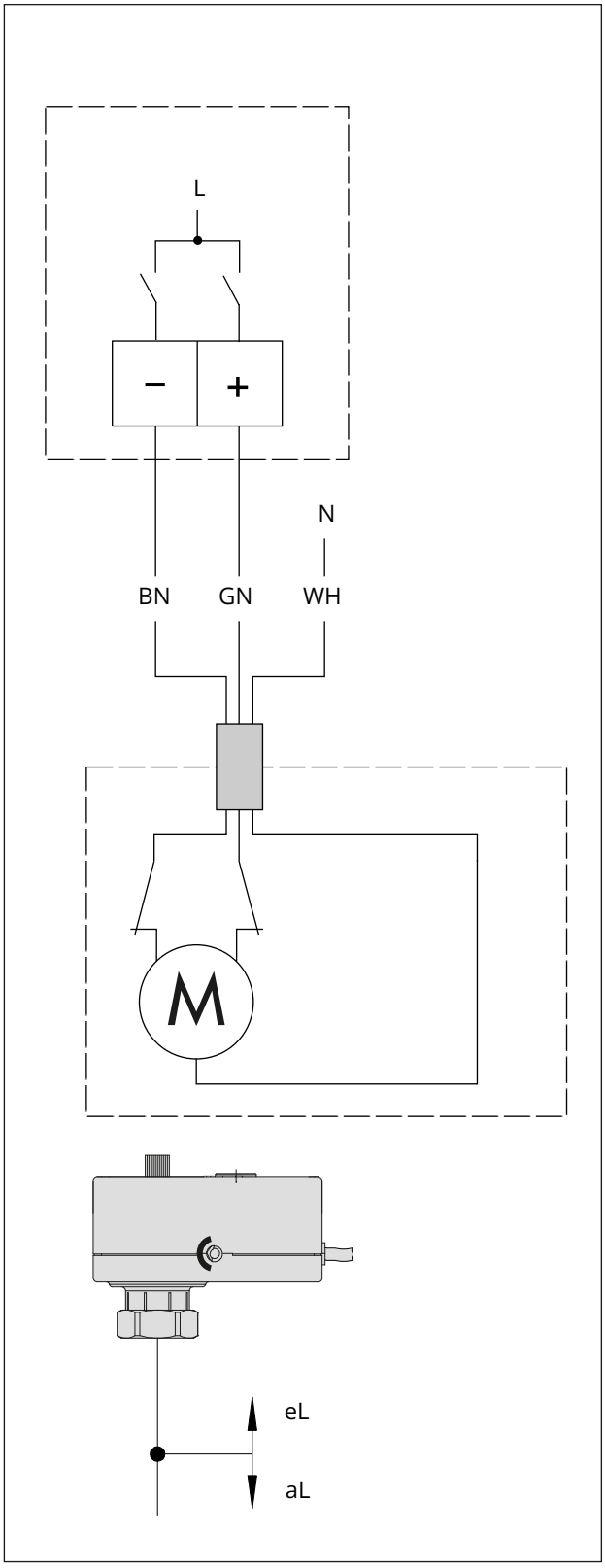

Fig. 3: *Electrical connection · Three-step control*

BN Brown
GN Green
WH White
\+ "Stem retracts" controller signal
– "Stem extends" controller signal
N Neutral

The following applies to three-step control:

NOTICE

Risk of malfunction due to the use of the wrong interference suppressors.

The rating of the interference suppression capacitors in the output circuit of the connected controller must not exceed a value of 2.5 nF to ensure the proper functioning of the actuator.

⇨ *Do not use controllers that have interference suppression capacitor with a higher rating.*

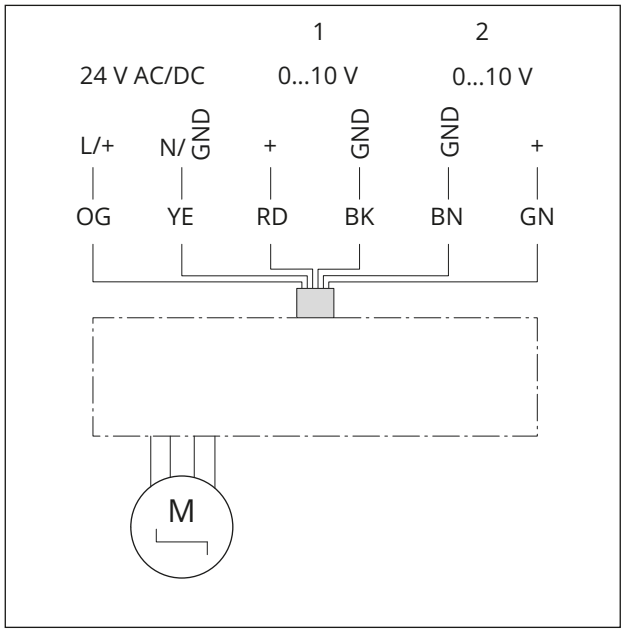

Fig. 4: *Electrical connection · Positioner*

1 Input
2 Output (position feedback)
OG Orange
YE Yellow
RD Red
BK Black
BN Brown
GN Green

Table 2: *Technical data · Type 5857*

Type 5857	Version with three-step signal	Version with positioner
Thrust	300 N	
Connection to valve	Force-locking	
Rated travel	6 mm	
Stroking speed	0.3 mm/s	0.2/**0.3** [2]/0.55 mm/s
Transit time for rated travel	20 s	30/**20** [2]/10 s
Supply voltage	230 V (±10 %), 50 Hz 24 V (±10 %), 50 Hz	24 V (±10 %), 50 Hz, 60 Hz and DC [3]
Power consumption	Approx. 3 VA	5 VA
Connecting cable length	1 m (standard), 2.5 m	2.5 m (standard), 5 m
Manual override	✓	
Permissible temperature ranges		
Ambient	0 to 50 °C	
Storage	-20 to +70 °C	
Process medium [1]	0 to 120 °C	
Degree of protection	IP42 according to EN 60529	
Class of protection	II according to EN 61140	
Device safety	According to EN 61010-1	
Noise immunity	According to EN 61000-6-2 and EN 61326-1	
Noise emission	According to EN 61000-6-3 and EN 61326-1	
Conformity	CE	
Materials		
Housing	Plastic (PPO with glass fiber reinforcement)	
Coupling nut M32x1.5	Brass	
Weight	Approx. 0.7 kg	
Digital positioner		
Input signal	–	0 to 10 V [2], R_i = 20 kΩ
Position feedback (output signal)	–	0 to 10 V [2], R_B = 1 kΩ
Characteristic	–	**Linear** [2], equal percentage, reverse equal percentage, user-defined

[1] The permissible medium temperature depends on the valve on which the electric actuator is mounted. The limits in the valve documentation apply.

[2] Default setting

[3] For 'Transit time for rated travel' setting = 10 s, the following applies: 24 V DC (0 %, +10 %).

Dimensions

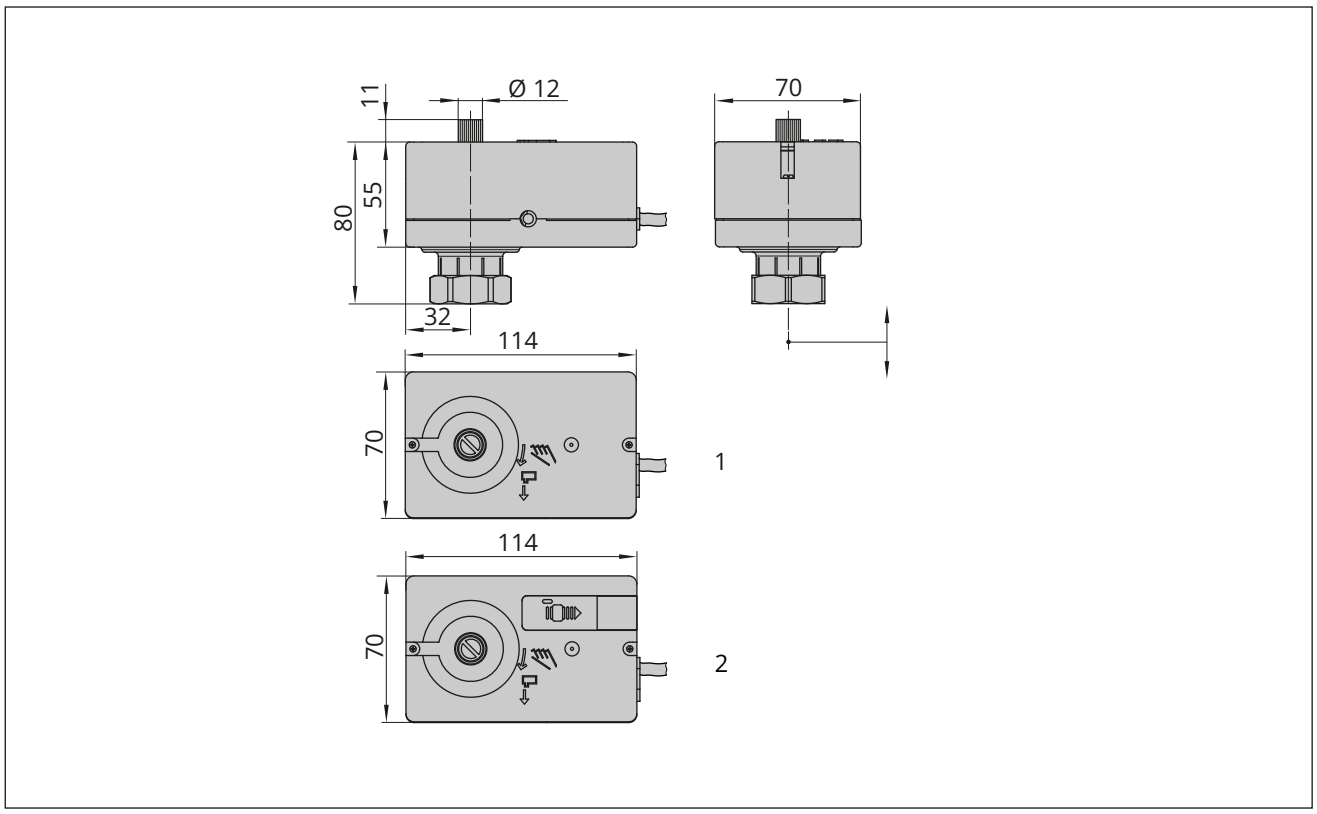

Fig. 5: *Dimensions in mm*

1 Version with three-step signal

2 Version with positioner

Accessories

Accessories	
For version with positioner	
Hardware package consisting of: – Memory pen-64 – Connecting cable RJ-12/D-sub, 9 pin – Modular adapter	Order no. 1400-9998
Connecting cable RJ-12/D-sub, 9 pin	Order no. 1400-7699 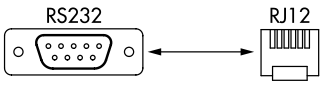
Memory pen-64	Order no. 1400-9753 
Modular adapter	Order no. 1400-7698 
USB to RS-232 adapter	Order no. 8812-2001 
Software	
TROVIS-VIEW (free of charge)	▶ www.samsongroup.com > DOWNLOADS > Software & Drivers > TROVIS-VIEW

Ordering text

Type 5857 Electric Actuator
- Version with three-step signal
  230 V, 50 Hz
- Version with digital positioner
  24 V, 50 Hz, 60 Hz and DC

Associated Mounting and Operating Instructions

– Type 5857	▶ EB 5857

2026-08-26 | English | 4000300835 | 1.2