PTFE-lined Ball Valve
Pfeiffer Type BR 20a

Application

Tight-closing, PTFE-lined ball valve for process engineering and industrial applications, especially suitable for corrosive media

Nominal size	**DN 15 to DN 150**
Nominal pressure	**PN 10**
Temperatures	**–10 to 200 °C**

PTFE lined ball valve equipped with:
- Pneumatic actuator
- Lever

Body material
- Spheroidal graphite iron with PFTE lining

Ball material
- PTFE encapsulated stainless steel

Further features
- TA-Luft (German clean air act) equivalent certification
- Exchangeable PTFE seat rings
- Ball shaft is sealed by a spring-loaded PTFE V-ring packing
- Connection conforming to DIN/ISO 5211
- Face-to-face dimensions acc. to DIN EN 558-1, Series 1 (DIN 3202, F1)

The ball valves fitted with a pneumatic actuator can be equipped with positioners, solenoid valves, and other devices in accordance with VDI/VDE 3845.

Versions

Standard version · Pfeiffer Type BR 20a PTFE-lined Ball Valve, DN 25 to DN 100 and Type BR 20z PTFE-lined Ball Valve, DN 150 (see also TB 20z) optionally available in the following versions:
- **Type BR 20a** · PTFE-lined ball valve with lever (Fig. 1)
- **Type BR 20a** · PTFE-lined ball valve with manual gear
- **Type BR 20a/31a** · PTFE-lined ball valve with Type BR 31a Pneumatic Rotary Actuator (Fig. 2)

Other versions
- Lined drain ball valve (see Type BR 21a)
- Control ball valve with calibrated sealing ring
- Lining with special PTFE compounds, e. g. conductive PTFE
- Heating jacket
- Ball shaft seal consisting of two PTFE V-ring packings and test connection (double packing)
- Grooved flanges according to DIN 2512
- Various materials for ball and seat rings
- Nominal pressure PN 16 possible

The ball valve is also available in valve sizes ½" to 6" and pressure rating ANSI Class 150.

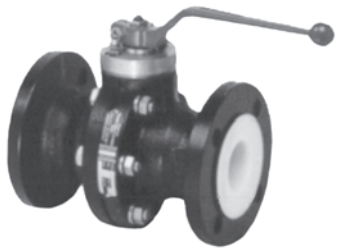

Fig. 1 · Type BR 20a PTFE-lined Ball Valve

Fig. 2 · Type BR 20a PTFE-lined Ball Valve with Type BR 31a Rotary Actuator

Information Sheet for rotary valves	**T 8200 EN**
Data Sheet for Type BR 31a Rotary Actuator	**T 9929 EN**

Edition March 2004

Data Sheet **T 9927 EN**

Principle of operation (Fig. 3)

The process medium can flow through the Type BR 20a Ball Valve in either direction.

The ball (3) with its cylindrical bore (ball channel) rotates around the center axis. The rotary angle of the ball determines the flow rate across the free area between the body (1) and the ball channel. The ball shaft, which is guided to the valve outlet, can be optionally connected to a pneumatic actuator over an adapter or equipped with a manually operated lever.

The ball (3) is sealed in the PTFE lined body by means of exchangeable seat rings (3). The ball shaft is sealed with a maintenance-free, spring-loaded PTFE V-ring packing (9). The packing is live-loaded by Belleville spring washers (10) located above the packing.

Fail-safe position

Depending on the version of the single-acting rotary actuator, the ball valve has two fail-safe positions which become effective when the actuator is relieved of pressure as well as when the supply air fails:

Control valve CLOSED without supply air

The ball valve closes when the supply air fails.

Control valve OPEN without supply air

The ball valve opens when the supply air fails.

Note

The ball valve can also be used for throttling service. Refer to the Pfeiffer Data Sheet DB20a-kd in this case.

Prior to using the ball valve in hazardous areas, refer to the maintenance instructions BA20a concerning its use according to ATEX 94/9/EC.

Pressure-temperature diagram

The differential pressures specified are limited by the pressure-temperature diagram.

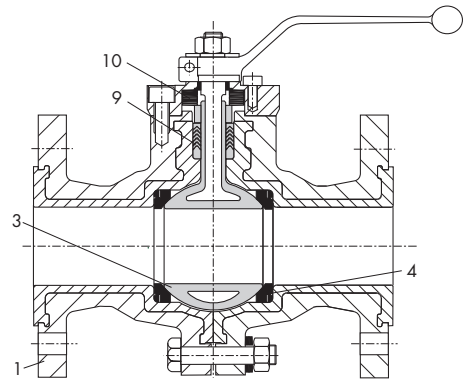

1 PTFE-lined body
3 Ball with ball shaft
4 Seat ring
9 V-ring packing
10 Belleville spring washers

Fig. 3 · Type BR 20a PTFE-lined Ball Valve

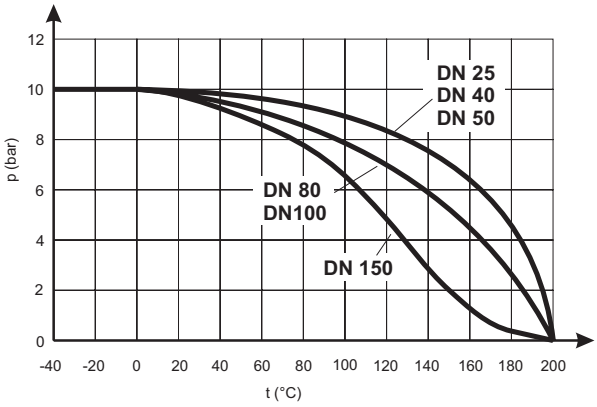

Fig. 4 · Pressure-temperature diagram

Table 1 • Technical data for Typ BR 20a

Nominal size **DN**	**15 to 150**
Nominal pressure PN	10
Flanges	DIN EN 1092-1 (DIN 2632/3633)
Face-to-face dimensions	DIN EN 558-1 Series 1 (DIN 3202 Series F1)
Ball sealing	PTFE
Packing	Maintenance-free PTFE V-ring packing loaded with Belleville spring washers
Temperature range	See pressure-temperature diagram in Fig. 4
Leakage DIN EN 12266-1	Test P12, leakage rate "A"

Table 2 • Materials

Body	**EN-JS1049 (GGG 40.3)**
Lining	White PTFE or conductive PTFE
Ball with ball shaft	1.4313/1.4317 encapsulated with white PTFE or conductive PTFE
Ball sealing	PTFE V-ring packing · Springs made of spring steel 1.8159 Delta Tone coated
Sealing rings	White PTFE
Outer coating	Black PVC (RAL 9005)

Table 3 • Max. permissible torque M_{dmax} , required positioning torque M_{dLauf} and initial breakaway torque M_{dl} in Nm

The specified breakaway torque are average values which were measured with air at 20 °C at the corresponding differential pressures. Operating temperature, process medium as well as longer operating times can affect the breakaway torque and positioning torque.

Nominal size DN	Perm. torque M_{dmax}	Required positioning torque (at t_{max}) M_{dLauf}	Differential pressure Δp					
			0 bar	2 bar	4 bar	6 bar	8 bar	10 bar
			Breakaway torque M_{dl}					
15	126	6	10	10	10	10	10	10
25	139	5	7.5	10	10	10	10	14
40	140	10	15	15	15	15	15	18
50	140	15	22.5	23	23	23	23	28
80	608	38	57	57	60	65	70	80
100	833	60	90	92	99	110	120	130
150	1350	300	On request					450

Table 4 • Dimensions in mm and weights

Nominal size DN	15	25	40	50	80	100	150
L	130	160	200	230	310	350	480
H	48	82	96	103	138.5	161	189
H1	66	101	115	122	157.5	180	235
SW	12	12	12	12	16	20	24
M	–	M 12	M 12	M 12	M 16	M 16	M 24
Connection for actuator acc. to DIN/ISO 5211	F05	F05	F05	F05	F07	F07	–
Weight without actuator in kg	5	6.5	11	14	26	37	65

Refer to Data Sheet T 9929 EN for data concerning the Pfeiffer Type BR 31a Rotary Actuator.

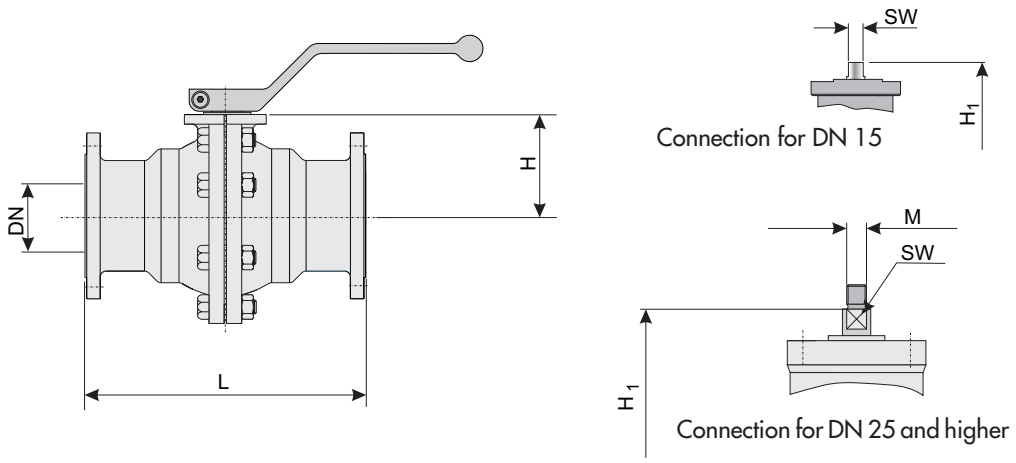

Fig. 5 · Dimensional diagram for Type BR 20a

Ordering text

PTFE-lined Ball Valve	Type BR 20a
Nominal size	DN ....
Nominal pressure	PN ....
PTFE lining	
On option, special version	
Rotary actuator	Type ....
Signal pressure	.... bar
Operating pressure	.... bar
Medium temperature	.... °C
Accessories	Positioner and/or limit switches, solenoid valve

Specifications subject to change without notice.

SAMSON AG · MESS- UND REGELTECHNIK
Weismüllerstraße 3 · 60314 Frankfurt am Main · Germany
Phone +49 69 4009-0 · Fax +49 69 4009-1507
Internet: http://www.samson.de